Engineering Applications of Artificial Intelligence 143 (2025) 109809

Contents lists available at ScienceDirect

Engineering Applications of Artificial Intelligence

journal homepage: www.elsevier.com/locate/engappai

Research paper

Human fall detection using pose estimation: From traditional machine learning to vision transformers

Ali Raza [a,b], Muhammad Haroon Yousaf [a,b,*], Waqar Ahmad [a,b], Sergio A. Velastin [c,d], Serestina Viriri [e]

[a] Department of Computer Engineering, University of Engineering and Technology, Taxila, 47080, Pakistan
[b] Swarm Robotics Lab, National Centre of Robotics and Automation (NCRA), Taxila, 47080, Pakistan
[c] School of Electronic Engineering and Computer Science, Queen Mary University of London, London, E1 4NS, UK
[d] Department of Computer Science and Engineering, Universidad Carlos III, Madrid, Leganes, 28911, Spain
[e] School of Mathematics, Statistics and Computer Science, University of KwaZulu-Natal, Durban, 4000, South Africa

ARTICLE INFO

Keywords:
Fall detection
Human pose estimation
Machine learning
Deep learning

ABSTRACT

Human activity recognition research for healthcare has drawn global attention in recent era. Recent advancements have led to various approaches capable of detecting diverse movements like walking, running, jumping, and falling. Fall detection is crucial due to its potential fatality, especially for older individuals. Sensors are widely employed to perceive environmental changes, and they can be integrated into wearable devices like phones, necklaces, or wristbands. However, these devices may be uncomfortable or unsuitable for continuous use. Video imagery, in principle, surpasses wearable sensors for fall detection. The proposed method uses video frames to identify falls, reducing the need for environmental sensors. We present an empirical analysis of vision-based human fall detection, employing multiple techniques to estimate human poses including a transformer-based pose estimation technique. These techniques yield foundational features used for training diverse networks, including machine learning classifiers to vision transformers. Our methodology achieves cutting-edge outcomes across the UR-Fall, UP-Fall, and Le2i fall detection datasets.

1. Introduction

Human fall detection encompasses a variety of approaches. Existing methodologies primarily target the recognition of human behaviors or activities, spanning actions like walking, standing, running, and falling. However, these applications extend beyond these categories. Within this context, detecting falls among the elderly holds significant importance. The World Health Organization (WHO) reports that approximately 37.3 million individuals worldwide experience fall-related injuries (World Health Organization and World Health Organization. Ageing and Life Course Unit, 2008). This results in millions seeking medical attention annually. Falls rank among the leading global causes of mortality. While older adults are most vulnerable to severe and fatal falls, incidents of fall-related injuries are also prevalent among children and young adults (World Health Organization and World Health Organization. Ageing and Life Course Unit, 2008). Detecting falls among the elderly constitutes a significant aspect of these efforts.

For fall detection, computer vision offers an option that is less cumbersome than wearable devices, and researchers have developed a range of techniques and datasets for this purpose. Research indicates that videos can provide insight into general human activities. Vision-based systems utilizing skeletonized data of human joints derived from regular images are gaining popularity due to their privacy-preserving nature and robustness in handling environmental variations compared to pixel-based methods. These approaches can identify various activities, including falling, walking, running, jumping, and jogging, with the capability to recognize multiple individuals within a single image. Probabilistic models within computer vision systems are employed for fall detection. Vision-based fall detection systems utilize human joint points within the skeletal structure for the detection and prediction of falls, resulting in reduced training time compared to image-based training.

Recent years have witnessed extensive research in the domain of human activity detection using sensors (Wisesa and Mahardika, 2019). However, several sensor-based devices encounter challenges such as frequent battery replacement, high costs, wearable device dependency,

* Corresponding author.
E-mail addresses: alirazabwn303@gmail.com (A. Raza), haroon.yousaf@uettaxila.edu.pk (M.H. Yousaf), waqar.ahmad@uettaxila.edu.pk (W. Ahmad), sergio.velastin@ieee.org (S.A. Velastin), viriris@ukzn.ac.za (S. Viriri).

https://doi.org/10.1016/j.engappai.2024.109809
Received 29 December 2023; Received in revised form 29 November 2024; Accepted 2 December 2024
Available online 21 January 2025
0952-1976/© 2025 The Authors. Published by Elsevier Ltd. This is an open access article under the CC BY-NC-ND license (http://creativecommons.org/licenses/by-nc-nd/4.0/).

sensor distance, and computational load. Recent research focus involves predicting a person's pose from video frames, aiming to mitigate these issues. These approaches can be categorized into two groups. Machine learning algorithms, including MLP, SVM, CNN, KNN, YOLO, and others, are employed to analyze video frames and identify human activities. Leveraging skeleton detection methods reduces training time and mitigates issues related to blurriness, lighting, and shadow effects. Given that human behavior cannot be fully captured within a single image, recent efforts primarily concentrate on detecting activities from sequences of images.

In this research, we address the multifaceted challenge of human fall detection through a novel experimental study that explores the efficacy of various pose estimation techniques. In this paper, we present human fall detection based on pose estimation techniques, and demonstrate how transformers can be effectively utilized for this purpose. We utilize distinct pose extractors, including OpenPose, BlazePose, and HRNet, along with Transformer-based pose estimation techniques. Our models encompass LSTM, RF, KNN, RNN, and vision transformers for this we use a single-camera perspective for human fall detection. This approach eliminates the need for sensor-based solutions, aligning with the growing demand for unobtrusive methodologies. Our methodology not only streamlines training time but also prioritizes user privacy while enhancing the accuracy and efficiency of machine learning algorithms. To protect privacy, we employ skeleton-based techniques to process video frames, extracting skeletal data and effectively anonymizing subjects by concealing RGB components. This method is lightweight compared to RGB images, facilitating easier processing, which is crucial for maintaining privacy in sensitive areas such as bedrooms, bathrooms, and kitchens. Additionally, we implement noise filtering and use skeleton images in place of RGB images in conjunction with a vision transformer model. Our approach includes preprocessing techniques to manage missing keypoints, with skeleton images proving more effective in cluttered environments and varying lighting conditions. When certain keypoints are missed, we apply supplementary processing techniques to address these gaps. We also employ linear interpolation techniques to mitigate the loss of joint point data, recognizing the significance of a sequence of frames for accurately capturing pose estimations, as single-frame analysis is often inadequate. This study aims to advance the field of fall detection by leveraging state-of-the-art pose estimation methods, ensuring both high accuracy and privacy protection.

This research paper makes the following contributions:

i. We provide a comprehensive survey of activity detection techniques, covering a broad spectrum of methods, from traditional machine learning approaches to state-of-the-art deep learning algorithms. The survey also includes the latest advancements in vision transformer-based pose estimation.
ii. We propose transformer-based techniques that can be used in human fall detection, aligning with recent deep learning trends.
iii. We introduce advanced pre-processing techniques to enhance the performance. These include relative position normalization and targeted linear interpolation, effectively addressing the challenges posed by missing skeletal key points.
iv. The proposed methodologies are rigorously evaluated using public benchmark datasets, including UR-FALL, UP-FALL, and Lei2. Their effectiveness is demonstrated by comparing results against existing approaches.

The paper is organized as follows: Section 2 reviews the related work. In Section 3, we explain the detail methodology we used. Section 4 focuses on the transformer-based pose estimation approach, while Section 5 presents the experimental results. Finally, Section 6 concludes the paper, summarizing the main findings and suggesting future directions.

2. Related work

This section discusses the diverse methodologies prevalent in the literature for fall detection. The aim is to establish a thorough understanding of the spectrum of approaches available. To investigate the effectiveness of the proposed approach and provide a benchmark for comparison, we leverage a variety of datasets including UR-Fall (Kwolek and Kepski, 2014), UP-Fall (Martínez-Villaseñor et al., 2019), and Le2i (Charfi et al., 2013). The field of pose estimation has recently gained significant attention as one of the most dynamic fields of research. A number of contemporary studies (Murad and Pyun, 2017) highlight its potential, underpinned by the utilization of machine learning and computer vision techniques to address multiple actions, including walking (Zhang et al., 2017), running (Zhang et al., 2017), standing (Lao et al., 2016), sitting (Ammar et al., 2011), jumping (Mekruksavanich et al., 2018), and falling (Banerjee et al., 2014). This domain's popularity is further validated by the findings of recent investigations (Wang et al., 2019). The application of sensor-based strategies introduces an additional layer of complexity. While various sensor-based approaches (Daga et al., 2017) present themselves as solutions, the focal point of this investigation lies in the area of computer vision algorithms. These algorithms, tailored to detect actual falls, have gathered attention due to their potential applications within healthcare contexts. This potential has been particularly harnessed in high-risk environments such as workplaces, shopping malls, hospitals, nursing homes, and various other settings (Pham and Vo, 2021), thereby amplifying their practical significance (Abdullah et al., 2023). Falls, as a primary cause of injury among the elderly, have driven significant research efforts. To detect human falls, wearable sensors like barometers, inertial sensors, and gyroscopes have been employed (World Health Organization and World Health Organization. Ageing and Life Course Unit, 2008). However, it is worth noting that these hardware components pose challenges due to their cost, intrusiveness, and limited user-friendliness (Liu et al., 2018; Kwon et al., 2019; Alarifi and Alwadain, 2021; Kavya et al., 2021).

Camera-based human movement detection presents a promising alternative to sensor-based systems (Nho et al., 2020; Hussain et al., 2019; Nguyen et al., 2009). Unlike other sensors, cameras eliminate the need for individuals to wear external devices, offering several advantages. In certain contexts, human skeletons can be used to extract informative features. Some methods even extend their capability to identify diverse activities such as falling, walking, running, jumping, and jogging (Tsai and Hsu, 2019; Kwolek and Kepski, 2014). Advancements have enabled the identification of multiple individuals within a single image (Tsai and Hsu, 2019; Kwolek and Kepski, 2014). Environmental cues like floor vibrations, sound patterns, and infrared imagery have also been explored by some researchers for fall detection (Taramasco et al., 2018; Clemente et al., 2019; Ogawa and Naito, 2020).

In the scope of Computer Vision-based fall detection systems (Lin et al., 2013; Lotfi et al., 2018), probabilistic models come into play for human outline recognition, while machine learning or neural networks are employed for movement classification. A Gaussian Mixture Model (GMM) is utilized in Lin et al. (2020) to discern the human body's shape against the background within an image. This approach circumvents the need for additional equipment or sensors. The integration of computer vision into fall detection systems enables the recognition and prediction of falls based on the human skeleton (Lin et al., 2020; Tsai and Hsu, 2019; Pishchulin et al., 2016). The use of skeletons mitigates environmental influences and enhances privacy preservation. By using joint points as opposed to images for training data, training time is reduced. However, this approach faces challenges due to the possible absence of some joint points and the potential degradation of feature quality, resulting in difficulties for fall detection.

Table 1
Summary of human fall detection works using visual data [Chhetri et al. (2021), Chen and Duan (2021), Cai et al. (2021), Sultana et al. (2021), Leite et al. (2021), Berlin and John (2021), Galvão et al. (2021), Guan et al. (2021), Kang et al. (2021c), Lin et al. (2020), Chhetri et al. (2021), Dentamaro et al. (2021), Ramirez et al. (2021c), Inturi et al. (2023), Ramirez et al. (2021a), Zou et al. (2021), Fatima et al. (2021), Charfi et al. (2013), Zou et al. (2021), Fei et al. (2023), Berlin and John (2021), Zhu et al. (2021a), Shu and Shu (2021), Hasib et al. (2021), Kang et al. (2021b), Apicella and Snidaro (2021), Yin et al. (2021), Keskes and Noumeir (2021), Liu et al. (2021), Kang et al. (2021a), Varshney et al. (2021), Wang et al. (2021), Zhu et al. (2021b), Tran et al. (2021), Chang et al. (2021), Nguyen et al. (2021)].

Ref	MultiActivity	Skeleton	Sequence	CamRGB	Model	Dataset
Chhetri et al. (2021)	No	No	Yes	Yes	CNN	UR-Fall
Chen and Duan (2021)	No	No	Yes	Yes	NanoDet-Lite	UR-Fall
Cai et al. (2021)	No	No	Yes	Yes	MCCF	UR-Fall
Sultana et al. (2021)	No	No	Yes	Depth	2D CNN-GRU	UR-Fall
Leite et al. (2021)	No	No	Yes	Depth	CNN-SVM	UR-Fall
Berlin and John (2021)	No	own	Yes	Yes	LSTM	UP-Fall
Galvão et al. (2021)	No	own	Yes	Yes	AutoEncoder	UP-Fall
Guan et al. (2021)	No	OpenPose	Yes	Yes	LSTM	UP-Fall
Kang et al. (2021c)	No	PoseNet	Yes	Yes	GRU	UP-Fall
Lin et al. (2020)	No	OpenPose	Yes	Yes	LSTM-GRU	UP-Fall
Chhetri et al. (2021)	No	OpenPose	Yes	Yes	SVM	UP-Fall
Dentamaro et al. (2021)	No	OpenPose	Yes	Yes	SVM	UP-Fall
Ramirez et al. (2021c)	Yes(12)	AlphaPose	No	Yes	RF-SVMMLP-KNN	UP-Fall
Inturi et al. (2023)	Yes(11)	AlphaPose	No	Yes	CNNLSTM	UP-Fall
Ramirez et al. (2021a)	No	AlphaPose	No	Yes	KNN	UP-Fall
Zou et al. (2021)	No	No	No	Yes	3D ConvNet	Le2i
Fatima et al. (2021)	No	AlphaPose	No	Yes	MPED-RNN	Le2i
Charfi et al. (2013)	No	AlphaPose	No	Yes	MPED-RNN	Le2i
Zou et al. (2021)	No	No	Yes	Yes	3D CNN	Le2i
Fei et al. (2023)	No	No	Yes	Yes	Flow-pose Net	Le2i
Berlin and John (2021)	No	No	No	Yes	CNN	own
Zhu et al. (2021a)	Yes(5)	No	No	Yes	DAG-SVM	own
Shu and Shu (2021)	No	No	Yes	Depth	RVM	own
Hasib et al. (2021)	No	No	No	Yes	CNN	own
Kang et al. (2021b)	No	PoseNet	Yes	Yes	CNN	own
Apicella and Snidaro (2021)	No	PoseNet	Yes	Yes	CNN-RNN	own
Yin et al. (2021)	Yes(8)	own	Yes	Depth	CNN-CUSUM	TST-Fall
Yin et al. (2021)	Yes(8)	own	Yes	Depth	MC-LSTM	TST-Fall
Keskes and Noumeir (2021)	No	No	Yes	Depth	ST-GCN	TST-Fall
Liu et al. (2021)	No	OpenPose	Yes	Depth	RF	SDU-Fall
Kang et al. (2021a)	No	own	Yes	Yes	GRU	SDU-Fall
Varshney et al. (2021)	–	OpenPose	Yes	–	–	–
Wang et al. (2021)	Yes(7)	Yolov3	Yes	Yes	3D CNN	PKU-MMD
Zhu et al. (2021b)	Yes(4)	OpenPose	Yes	Depth	DNN	FDD
Tran et al. (2021)	No	No	No	Yes	CNN-YOLO	CMD-Fall
Chang et al. (2021)	No	OpenPose	Yes	Yes	LSTM	CMU
Nguyen et al. (2021)	No	No	No	Yes	KNN-SVM	BOMNI

Recent advancements in fall detection techniques have increasingly emphasized the utilization of visual cues, particularly focusing on human joint points as pivotal indicators of motion. Inturi et al. (2023) introduce a novel method employing a pre-trained AlphaPose network to extract essential joint keypoints from subjects, which are subsequently analyzed using a convolutional neural network (CNN) framework. The integration of long short-term memory (LSTM) architecture enhances the system's ability to maintain long-term dependencies, thereby ensuring improved stability and reliability in fall detection. This combination represents a significant stride towards robust and efficient fall detection systems, highlighting a fresh perspective in the application of vision-based approaches. Fei et al. (2023) developed Flow Pose Net (FP-Net) to achieve precise fall detection in video scenarios by integrating visual flow and human gesture data. The model identifies key body joints through a human posture estimation model and employs a graph convolutional network (GCN)-based approach for facial trait learning. Motion features extracted via a CNN-based visual flow computation method are aggregated and classified to differentiate falls from other activities. Validation on URFD and Le2i datasets demonstrates FP-Net's robust performance and reliability in real-world applications.

Seredin et al. (2023) adopt a featureless approach to enhance privacy in human activity recognition by excluding prominent anthropomorphic and visual characteristics. Their method utilizes a generalized pairwise comparison function to transform invariant human skeletal models into alternative dynamic entity spaces, generating activity maps suitable for recognition with CNNs. Experimental validation includes analyzing video streams from the TST Fall Detection v2 database, refining skeletal ordering and activity mapping techniques through the shortest unclosed path algorithm. Advancements in deep learning have revitalized interest in human fall detection using CNNs. Du et al. (2024) introduce innovative modules: the Image Preprocessing (IPP) module enhances real-time data, the Skeleton Keypoint Detection and Association (SKDA) module accurately identifies skeletal keypoints across frames, and the Critical Feature Perception (CFP) module improves human activity classification. Their proposed SKIP approach demonstrates promising results on Telecommunication System Team v2 (TSTv2) and proprietary datasets, significantly enhancing detection precision. Ergüder et al. (2024) introduces a novel approach to video-based fall detection systems emphasizing skeleton joint utilization. The study underscores clear visualization of pose estimation outcomes and employs ShuffleNet V2 with a deformable layer as the classification model. Experimental investigations across URFD, UP-Fall Detection, Le2i, and NTU RGB+D 60 datasets, covering diverse activities including falls, consistently demonstrate robust performance, validating the effectiveness of this integrated methodology within video surveillance contexts

Various methodologies employ datasets like UR-Fall, UP-Fall, and Le2i to detect falls. This work investigates skeleton techniques adaptable to different datasets. Table provides an overview of ongoing research in fall detection. The first column denotes the reference articles, "While the second column indicates whether the technique can detect multiple activities, the number in parentheses (e.g., 'Yes (12)') specifies how many activities the method can recognize. The third column indicates if skeleton detection is used. For techniques involving image sequences, this is highlighted in the fourth column. The presence of depth sensors is indicated in the fifth column. The AI

Table 2
Fall detection vision-based datasets.

Dataset	Fall types	Other activities	Trials	ML method	Performance
UR-Fall (Kwolek and Kepski, 2014)	From sitting on chair from standing	Walking, crouching down, lying, sitting	70 Sequences	SVM	Accuracy: 94.99% Precision 89.57% Sensitivity 100% Specificity 91.25%
TST Fall Dataset (Seredin et al., 2023)	Fall to the floor	Lying, sitting, bending standing	–	CNN-CUSUM	Accuracy: 94.7%
UP Fall (Inturi et al., 2023)	Forward using knees, backward sideward sitting, Forward using hands	Sitting, picking up object, jumping, laying, walking, standing, kneel down	3 repetitions	CNN LSTM	Accuracy: 98.59% Precision: 91.08% Recall: 91.37 Specificity: 98.96% F1-score: 92.47%
Le2i (Fei et al., 2023)	4 types of scene	Office Home Coffee room Lecture room	–	Flow-pose Net;	Accuracy: 98.95
PKU-MMD (Liu et al., 2017)	–	Putting on the glassed, hugging, shaking, drinking waving hand	6 sequences	SVM,RNN, LSTM	F1 score: 13.1% 52.6% 33.3%
CMD-Fall (Tran et al., 2018)	Lying on bed, drinking, sitting on the chair, walking	Horizontal movement	20 actions	CNN: Res-TCN	F1 score: 39.38% F1 score: 76.06
SDU-Fall (Ma et al., 2014)	Fall to the floor	Squatting, lying, sitting, waling, bending	6 actions 10 times	Bag of words model built upon curvature scale space features	Specificity: 76.62% Accuracy: 79.91% Sensitivity: 81.91%
SFU-IMU (Aziz et al., 2017)	15 types of falls	Rising, walking, ascending stairs, Picking up an object	3 repetitions	SVM	Specificity: 96% Sensitivity: 96%

algorithm utilized is shown in the sixth column, and the final column specifies the employed dataset (Lin et al., 2020; Tsai and Hsu, 2019; Pishchulin et al., 2016). Table 1 reveals that many existing fall detection techniques rely on traditional machine learning methods. While effective, these approaches often lack pose estimation or require specialized depth sensors, limiting accuracy and scalability. Techniques using only RGB or sequence data may struggle with occlusions and varying conditions. The proposed scheme addresses these limitations by incorporating pose estimation methods along with preprocessing techniques and vision transformers, resulting in more accurate and generalized fall detection across diverse datasets.

This study utilized the UP-Fall (Martínez-Villaseñor et al., 2019), UR-Fall (Kwolek and Kepski, 2014), and Le2i (Charfi et al., 2013) datasets. Table 2 provides an overview of well-established vision-based fall datasets, as documented in prior works (Kwolek and Kepski, 2014; Abdullah et al., 2023; Kudo and Aoki, 2017; Martínez-Villaseñor et al., 2019; Yu et al., 2021; Liu et al., 2017; Tran et al., 2018; Ma et al., 2014; Aziz et al., 2017). Numerous fall detection methodologies and datasets have been reported. For instance, the UR-Fall dataset collected data from two Kinect cameras and a Bluetooth-connected inertial device, capturing a total of seventy falls carried out by five individuals. The dataset encompasses activities in everyday environments, with each individual record comprising depth, RGB camera feeds, and accelerometer data. A threshold-based approach achieved a fall detection accuracy of 94.99% in this context. In another study (Kudo and Aoki, 2017), CNNs (Convolutional Neural Networks) were utilized to detect falls among elderly individuals living alone, resulting in a reported accuracy of 74%. Machine learning classifiers were also employed for fall identification (Martínez-Villaseñor et al., 2019). The characteristics of relevant datasets and their corresponding baseline performance are concisely outlined in Table 2. As gleaned from the literature survey, a significant portion (60%) of activities were detected using skeleton data, with OpenPose and Alphapose being the predominant techniques. Around 20% of research efforts focused on detecting multiple actions. In evaluating their approaches, researchers frequently turned to well-known datasets, with UR-Fall (30%), UP-Fall (16%), and personal datasets (5%) being the most commonly selected options. Additionally, a notable majority (70%) of contemporary research used sequential data to identify activities (Kwolek and Kepski, 2014; Kudo and Aoki, 2017; Martínez-Villaseñor et al., 2019; Yu et al., 2021; Liu et al., 2017; Tran et al., 2018; Ma et al., 2014; Aziz et al., 2017)

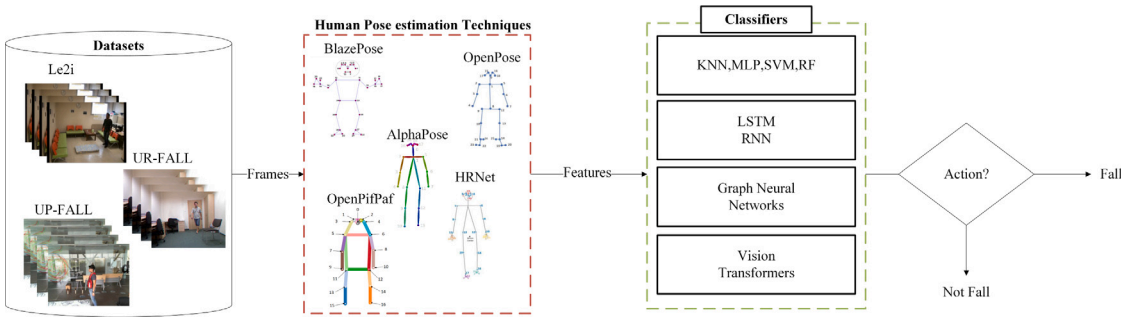

Fig. 1. Conceptual flow diagram pipeline A.

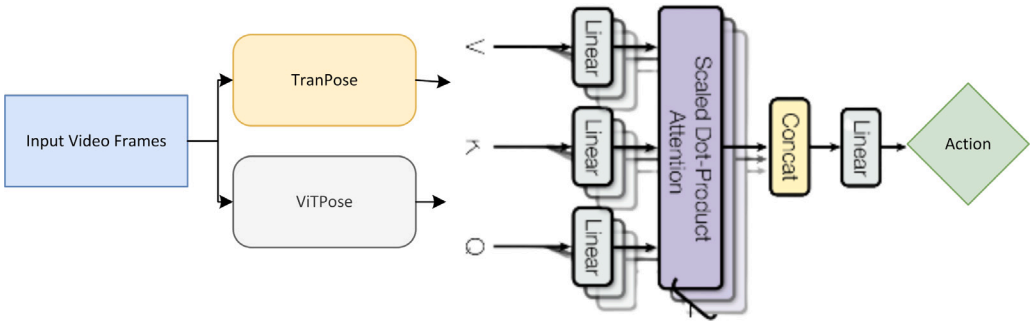

Fig. 2. Conceptual flow diagram pipeline B.

3. Methodology

The field of human pose estimation uses advanced computer vision techniques to identify and classify different body positions like standing, sitting, falling, or lying down. These methods often predict specific body parts or joints. In this context, we provide an overview of human posture estimation. This entails the utilization of a diverse array of pose extraction techniques and strategic methodologies (Fang et al., 2017).

Figs. 1 and 2 illustrate the process of detecting human falls. For this study, we draw upon three publicly accessible datasets: UR-Fall (Kwolek and Kepski, 2014), UP-Fall (Martínez-Villaseñor et al., 2019), and Le2i (Charfi et al., 2013). Within this research context, we use AlphaPose (Fang et al., 2017), OpenPose (Cao et al., 2019), BlazePose (Lugaresi et al., 2019), OpenPifPaf (Kreiss et al., 2021), and HRNet (Cheng et al., 2020) for pose estimation within pipeline A. In pipeline B, we harness the capabilities of vision transformer-based pose estimation techniques across the same trio of datasets. Each of these pose estimation methods yields mapped sets of skeleton points. BlazePose identifies 33 salient landmarks encompassing the entirety of the human physique, while AlphaPose defines 17 key points that map to the human anatomy. In tandem with vision transformer-based techniques, the use of attention mechanisms has been found to enhance the accuracy of pose estimation.

We employed three datasets to train the models, with 70% of the data reserved for training and 30% for testing. Additionally, a 10-fold cross-validation technique was utilized to evaluate the model's performance comprehensively. The process of training classifiers, leveraging these gathered skeleton points, encompasses an array of techniques, including machine learning classifiers, sophisticated RNNs (Recurrent Neural Networks) (Hasan et al., 2019), adaptive LSTMs (Long Short-Term Memory networks) (Jeong et al., 2019), graph neural networks (Keskes and Noumeir, 2021), and transformers. The classifiers are tested on how well they predict whether a fall event has occurred.

3.1. Pose estimation techniques

In this research, we employ methods that rely on skeletons to estimate human poses. These methods provide important points on the body. We utilize various techniques to extract these poses, which are outlined in the following sections.

3.1.1. AlphaPose

AlphaPose is a tool for estimating poses involving multiple individuals, that depends on a person locator (e.g. Yolo). It has shown impressive results on benchmark datasets, with 70% mean average precision on the COCO dataset and 80% on the MPII dataset. Additionally, AlphaPose works alongside Flow, an online pose tracker, to connect poses of the same person over time. The 17 joint points that AlphaPose provides can be seen in Fig. 3(a) (Fang et al., 2017).

3.1.2. OpenPose

OpenPose, developed by Carnegie Mellon University (CMU), is a method for estimating poses in real-time for multiple individuals. It is based on Caffe and a supervised Convolutional Neural Network. This algorithm can analyze how a person moves, their appearance in an image, and the positions of their body. It works well for both images with one person and those with multiple people. It is efficient and accurate, with a fast recognition speed.

To calculate the human skeleton, OpenPose uses Part Affinity Fields (PAFs) and Confidence Maps. First, a feature map is created using VGG-19. Then, this feature map is input into a CNN network with two branches and multiple stages. One branch predicts limb parts using PAFs, while the other predicts joint parts using 2D confidence maps. The confidence map and PAFs together help create a 2D skeleton of the person. OpenPose can estimate 25 joint points on the human body. An example of a detected skeleton is shown in Fig. 3(b) (Cao et al., 2017).

3.1.3. BlazePose

BlazePose (Lugaresi et al., 2019) is a technique based on machine learning (ML) that is used to estimate the body's pose. It uses a segmentation mask to separate the background and identify 33 specific points in RGB video frames. These points are shown in Fig. 3(c). This method assumes that the human body can be approximated by a circle in terms of its center, movement, and size. To achieve this, BlazePose predicts two virtual keypoints. Then, it calculates the angle formed by

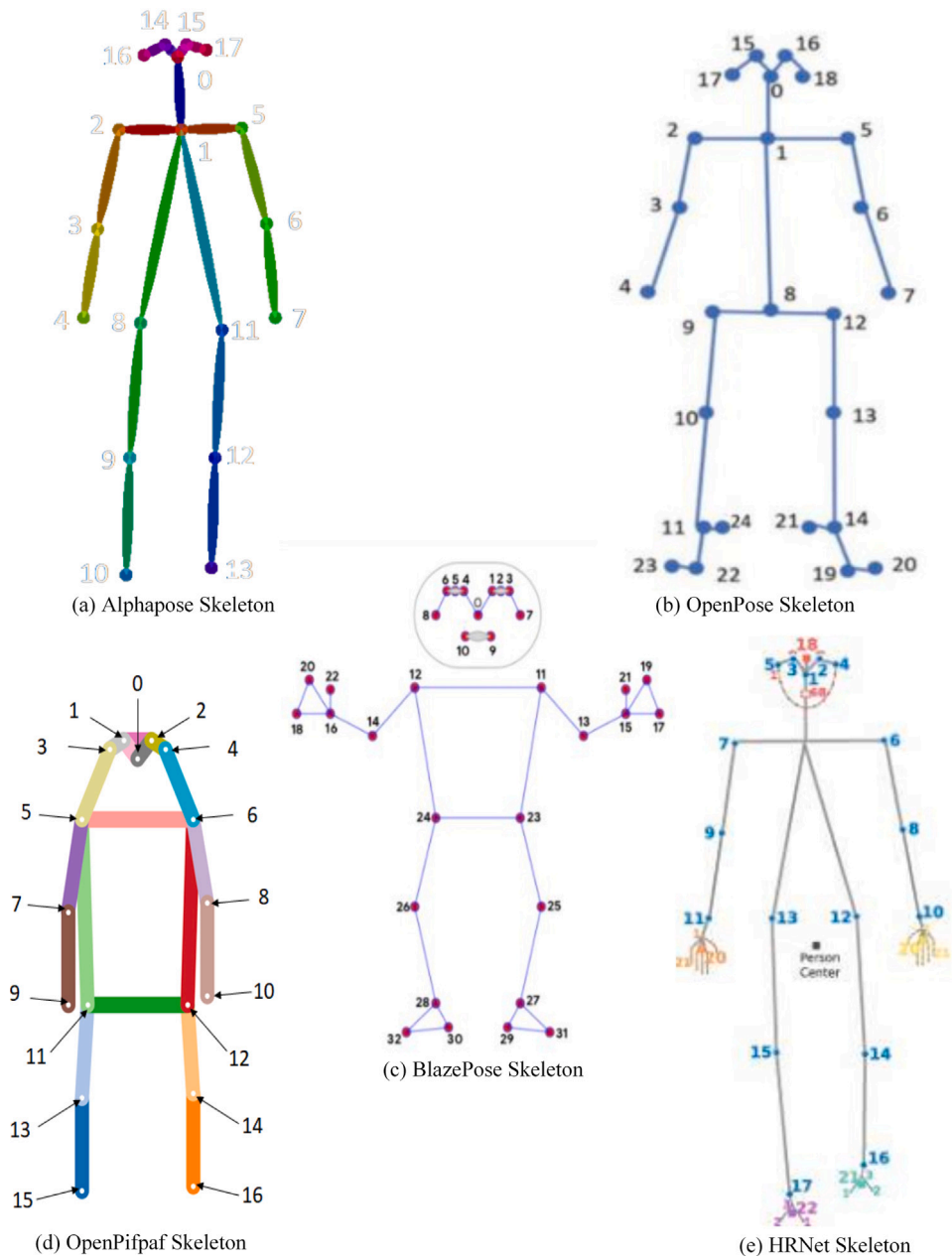

Fig. 3. Illustration of skeletons from various pose extractors.

the shoulders and the radius of the circle that encircles the entire body. So, BlazePose works in two steps. First, it detects the person's presence, and once the person is detected, it proceeds to calculate their pose.

3.1.4. OpenPifPaf

For real-time pose detection and tracking, a framework named OpenPifPaf (Kreiss et al., 2021) has been introduced. This framework is designed to simultaneously identify and establish spatial–temporal connections between keypoints. Through the application of composite fields, this neural network architecture employs nodes to represent semantic keypoints (such as joints in a person's body) across multiple frames, enabling the creation of a unified linked graph for spatial–temporal posture inference. The OpenPifPaf skeleton is depicted in Fig. 3(d).

3.1.5. HRNet

The HRNet (Cheng et al., 2020) is an advanced model for human pose estimation that employs a high-to-low key points network to generate low-resolution renditions of full-resolution human poses. The objective is to attain accurate human pose estimations at a suitable resolution level. Throughout this procedure, the network maintains high-resolution representations. The initial stage involves creating a high-resolution network, followed by the incorporation of high-to-low-resolution sub-networks to form the second stage. These sub-networks, operating at varying resolutions, are interconnected concurrently. This arrangement facilitates continuous information exchange between similar representations, leading to the development of super-resolution representations. Consequently, this approach enhances the accuracy and precision of the heatmap, particularly in terms of location.

3.2. Human fall detection with machine learning sliding window technique

In the first methodology, we incorporate diverse classifiers such as SVM, KNN, MLP, and RF, which act as the heads of a network. The workflow of this methodology is depicted in Fig. 4. To execute this, we

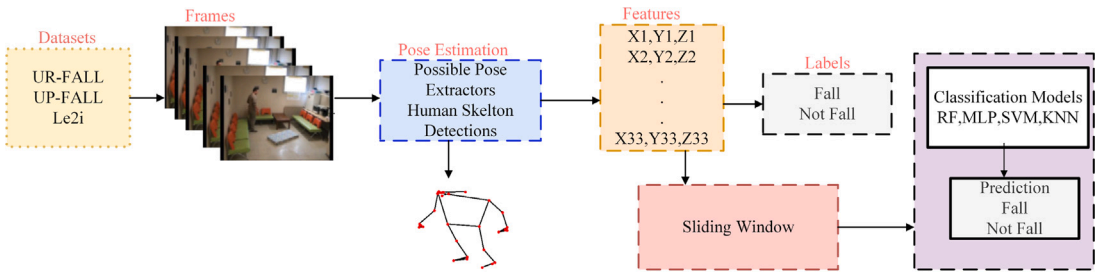

Fig. 4. Machine learning classifiers sliding window flow diagram.

begin by acquiring individual human skeletons from the UR-Fall, UP-Fall, or Le2i datasets. The subsequent step involves estimating human poses through the employment of diverse pose extractors, including AlphaPose, OpenPose, BlazePose, HRnet, and OpenPifPaf. These pose extractors help us identify crucial key points. Subsequently, we construct a model that utilizes these key points as essential features. During the training process, we harness a range of classifiers to facilitate the prediction of sequences indicative of falls or non-fall activities. This methodology enables us to explore and analyze fall detection across various datasets, leveraging a variety of pose estimation techniques and classifiers. To determine frame sequences, sliding windows combine sequential skeleton features. Using this strategy, windows are sized to cover the sequence of images equal to the video rate (fps) multiplied by the window size (swl = fps × seconds). As an example, if a video is taken at 25 frames per second at 1-second intervals, each window will span 25 frames ($swl = 25$). Each window is one frame to the right of the one before it, and so on until the last frame of the video is covered by a window.

A sliding window total number can be determined by using the following equation:

$$sw_m = FramesVideo - swl + 1 \tag{1}$$

sw_m is the total number of sidings in our methodology, using the concept called the "sliding window", denoted as sw, to process video frames. The total number of frames in the video is represented by $FramesVideo$. where $FramesVideo$ is the total number of frames in the video.

Each sliding window encompasses a set of consecutive frames that capture the actions of an individual. This arrangement ensures that each sliding window includes the skeletons of individuals engaged in various activities. Each frame in the format (1, swl, n) consists of n identified skeletons where n signifies the count of detected skeletons.

Regarding the sliding window method, in our approach each set of frames within a sliding window undergoes classification inference. Typically, a single classification result is generated from each sliding window. The number of frames (or sets of joint key points returned by an HPE model) contributing to one classification result aligns with the window size (swl), which represents the time duration (seconds) multiplied by the video frame rate (fps). Therefore, with an inference rate of 25 fps, each sliding window set of frames includes 25 frames or sets of joint key points that collectively contribute to producing a single classification output.

3.3. Fall detection with RNN and LSTMs

In the second Methodology, depicted in Fig. 5, the approach is tested utilizing three distinct fall detection datasets. The initial step entails extracting individual frames from videos, which are then processed through pose extractors to identify segments of the human skeleton. The primary objective of this step is to determine the posture of a person and locate their joints. Falling often leads to distinct variations in human skeletons. Diverse pose extraction methods are employed to ascertain if a sequence of skeletons corresponds to a fall. For instance, BlazePose furnishes seventeen key points representing the entire body's skeleton. Fig. 6(b) provides an example of skeleton detection using BlazePose from video frames. Other pose extractors are also applied, each offering different skeleton points based on their architectural approaches. Once the skeleton sequences are obtained, we employ LSTM (Long Short-Term Memory) and RNN (Recurrent Neural Network) architectures to train the model for predicting fall and normal scenarios. The posture estimation methods facilitate the identification of body joints within each frame. The number of skeletons within a video frame is denoted as n, and this value varies depending on the pose extractor. For instance, BlazePose yields 33 key points. Unidentified joints are marked as [0.0, 0.0]. A posture vector with 16 dimensions is derived from each frame. A complete video frame is subdivided into 24 frames. Eqs. (2), (3), and (4) define the segmentation of a full fall video using sequential posture time steps. Each frame is represented as x_i.

The posture vector comprises 16 dimensions, with X signifying the feature vector, V indicating the fall's feature sequence, and T denoting the number of time step sequences in the video.

The chosen architecture employs RNN, specifically LSTM. Initially, we constructed these architectures with a single recurrent layer. The optimal number of recurrent units was determined to be between 20 and 80. Additional hidden layers, comprising units, were added to deepen the network. A 10-layer LSTM with 80 hidden units exhibited the most effective performance in predicting temporal dynamics. Batch normalization (BN) layers were introduced past the input and recurrent layers to alleviate internal covariate shift and ensure consistent activation from the LSTM layer. The outputs from the recurrent layers are then mapped to fall or normal classes via a fully connected layer using softmax activation. The architecture of the proposed network is illustrated in Fig. 5. The training of the LSTM model involved employing the sliding window approach on individual sub-sequences of data for each video within the dataset. This technique also assigned a label to each sub-sequence datum. To be more specific, the label assigned to each sub-sequence datum was determined based on the entity with the highest occurrence.

$$\boldsymbol{x} = (x_1, x_2, x_3, \ldots, x_n) \tag{2}$$

$$\begin{bmatrix} x_1^1 & x_2^1 & x_3^1 & \ldots & x_n^1 \\ x_1^2 & x_2^2 & x_3^2 & \ldots & x_n^2 \\ x_1^3 & x_2^3 & x_3^3 & \ldots & x_n^3 \\ \vdots & \vdots & \vdots & \vdots & \vdots \\ x_1^{24} & x_2^{24} & x_3^{24} & \ldots & x_{16}^{24} \end{bmatrix} = \begin{bmatrix} \boldsymbol{x}_1 \\ \boldsymbol{x}_2 \\ x_3 \\ \vdots \\ x_{24} \end{bmatrix} = \boldsymbol{X} \in \mathbb{R}^{24\times n} \tag{3}$$

$$\boldsymbol{V} = (\boldsymbol{X}_1, \boldsymbol{X}_2, \boldsymbol{X}_3, \ldots, \boldsymbol{X}_T) \tag{4}$$

3.4. ST-GCN human fall detection technique

Fig. 7 illustrates the approach for Fall Detection utilizing Spatial–Temporal Graph Convolutional Neural Networks (ST-GCN). ST-GCN uses both spatial and temporal interactions among joints to yield a more precise depiction of human movement patterns. In this methodology, we investigate various pose extractors with different datasets to train the ST-GCN layer network. Initially, human pose estimation

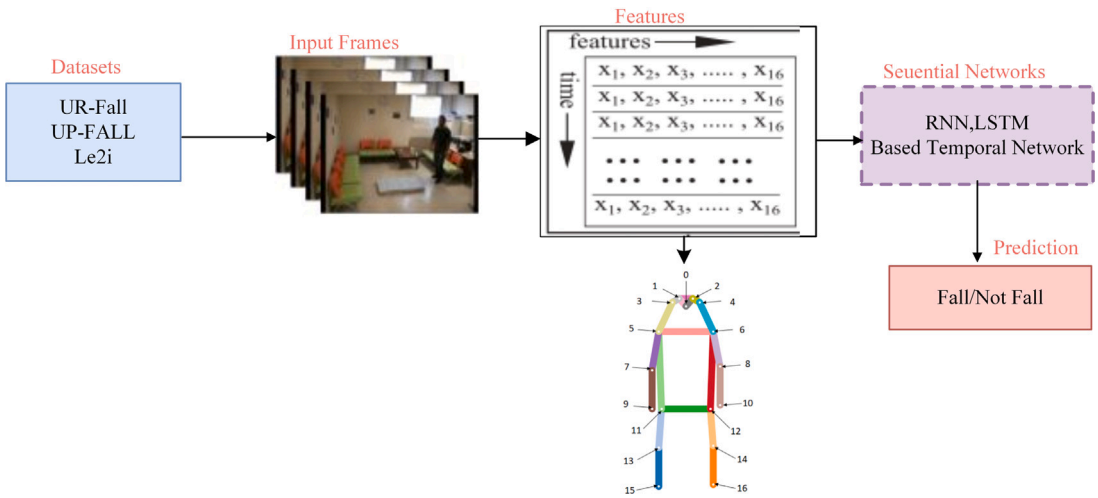

Fig. 5. RNN and LSTM flow diagram.

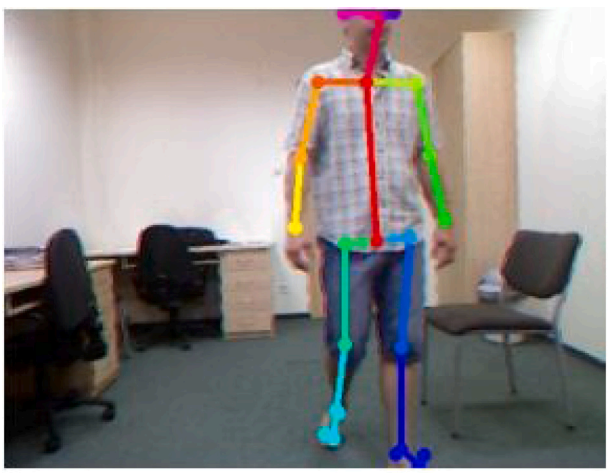

(a) AlphaPose Skeleton Detection

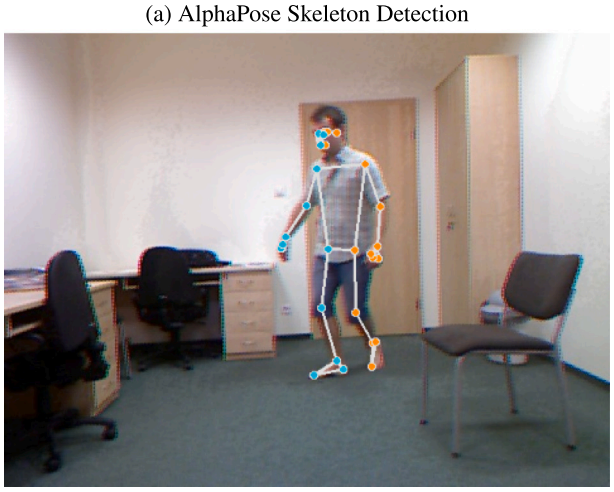

(b) BlazePose Skeleton Detection

Fig. 6. Skeleton detected from video frames.

is performed using BlazePose, followed by the sequential utilization of other pose extractors. BlazePose yields a set of 33 detailed landmarks representing the complete body structure, as depicted in Fig. 6(b). The ST-GCN framework comprises ten layers, with the first four levels yielding 64 output channels, followed by the subsequent levels providing 128 output channels. Finally, the last three levels have 256 output channels. A convolution kernel of size 9 is employed, supplemented by the incorporation of residual networks and dropout layers to reduce overfitting. The classification of the generated feature vectors is carried out using a Softmax classifier.

3.5. Fall detection with vision transformer

The schematic representation of the proposed vision transformer approach is presented in Fig. 8. The network is fed a sequence of video frames as its input, subsequently subjected to sequential processing through consecutive blocks, each of which is elaborated upon in the subsequent subsection. The approach involving vision transformers has been investigated using the three distinct fall detection datasets coupled with pertinent pre-processing techniques. The extraction of human skeletal joints is achieved through the application of different pose estimation methods including vision transformer pose estimation techniques VitPose and TransPose. An instance of the detected skeleton through the utilization of AlphaPose is displayed in Fig. 6(a).

3.5.1. Data pre-processing

Pose detection methods are often susceptible to environmental noise, occlusions, and interference from indoor objects. Our proposed scheme addresses these challenges through several key techniques. To minimize the impact of environmental disruptions, we employ preprocessing methods such as noise filtering and background subtraction, utilizing only skeleton data instead of RGB images. Additionally, the integration of vision transformers enables the model to capture long-range dependencies and contextual information, enhancing robustness against occlusions and noise. These strategies significantly improve the accuracy and reliability of pose detection, particularly in complex indoor environments.

3.5.2. Relative position normalization

We apply min–max normalization to scale the data to the interval [0, 1] and speed model convergence to increase model accuracy. The new scale data is computed according to Eq. (5).

The transformed X_{norm} containing scaled data is computed as per Eq. (5).

$$X_{norm} = \frac{X - X_{\min}}{X_{\max} - X_{\min}} \in [0, 1] \tag{5}$$

The original dataset value is denoted by X, the lowest value is represented by X_{min} and the highest value is represented by X_{max}.

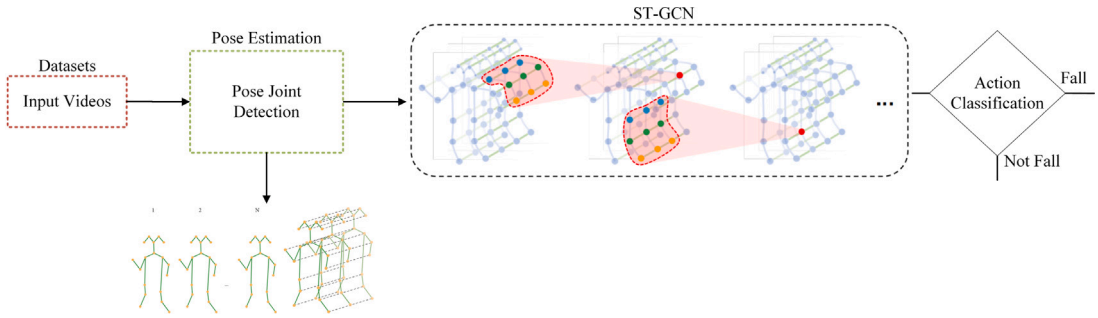

Fig. 7. ST-GCN flow diagram.

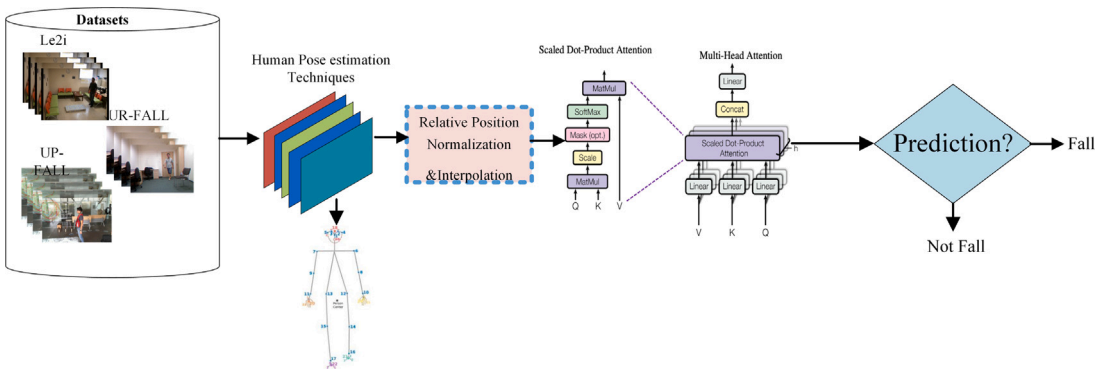

Fig. 8. Multi-headed vision transformer flow diagram.

However, the dataset contains instances with missing values. Although not all groups have missing data, a value of 0 indicates that X_{min} is also 0 This alteration in the original data distribution results in uncertain attributes. Hence, we propose using the normalization approach outlined in Eqs. (6) and (7)

$$x_c^f = \frac{W}{2} \tag{6}$$

$$y_c^f = \frac{H}{2} \tag{7}$$

which transforms the original coordinate positions to equivalent positions in the x_n^f, y_n^f frame for enhanced comparability. A point with a value of 0 is designated as a missing point and is excluded from calculations. In the presence of a missing point, the calculated center point will be substituted in its place. The ensuing distances (x_{dis}, y_{dis}) that need to be displaced are defined by Eq. (8) and (9).

$$x_{\text{dis}}^f = x_8^f - x_c^f \tag{8}$$

$$y_{dis}^f = y_8^f - y_c^f \tag{9}$$

The displacement is to the center point where the eighth joint point is (x_f^8, y_f^8) and the reference point is the center hip circumference (x_c^f, y_c^f). The object advances to the right when the displacement value is smaller than zero. The object moves to the left when the displacement value is greater than zero.

The updated coordinates for the junction point (rx_n^f, ry_n^f) for computing the displacement to the relative location are then given as

$$rx_n^f = \left(x_n^f - x_{dis}^f\right) \tag{10}$$

and

$$ry_n^f = \left(y_n^f - y_{dis}^f\right) \tag{11}$$

The Relative Position Normalization method offers two distinct advantages. Firstly, it preserves the original data distribution, and secondly, it obviates the need for simultaneous computation of missing data points. Furthermore, this process eliminates superfluous features. It is worth highlighting that specific facets of human mobility, like lateral movement or proximity, maintain the bones in consistent positions. This characteristic imparts continuous motions to the model, which proves beneficial for the learning process.

Fig. 9(a) illustrates the image size adjustment to 640 by 480 pixels, followed by the determination of its center. Subsequently, in Fig. 9(b), the human skeleton undergoes repositioning towards the image center, aligning the central hip-joint point with the central image point. Certain skeletal joints are considered non-discriminatory for distinguishing between fall and non-fall incidents. To streamline the process and enhance clarity, these redundant joints are removed. The final set of retained joints for training includes the nose, shoulders, elbows, wrists, neck, hips, knees, and ankles.

BlazePose primarily relies on 2D image features for skeleton identification, which can lead to instability and prediction errors when these features are absent. When the human body is obscured, unclear in shape, or if the upper and lower limbs are concealed, it can result in data loss and inaccuracies during skeleton construction. In the proposed approach, this issue is addressed by employing linear interpolation to adjust for missing data. To ensure an ample dataset, we aggregate 100 images together and employ the initial data, devoid of any missing values, to fill in the gaps in subsequent images. Through this interpolation process, we derive anticipated data values from the original dataset. However, when there is an insufficient number of initial joint points, the anticipated and actual missing values may substantially differ. Fig. 10 illustrates instances of undetected skeleton joints. With linear interpolation, we employ two known data points to calculate the slope between them and estimate the approximate values for Y (Eq. (12)).

$$Y = Y_0 + \frac{Y_1 - Y_0}{X_1 - Y_0}\left(X - X_0\right) \tag{12}$$

The variance between estimated and actual values exhibits no statistically significant difference when the transition point is intact. Prior to RP normalization, the dataset exhibited a 22.38% absence of critical points. Subsequent to RP normalization, this absence is reduced to

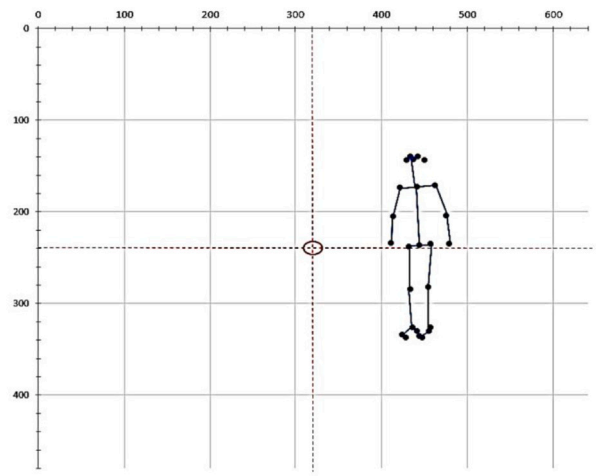

(a) The exact location and number of the original human skeleton

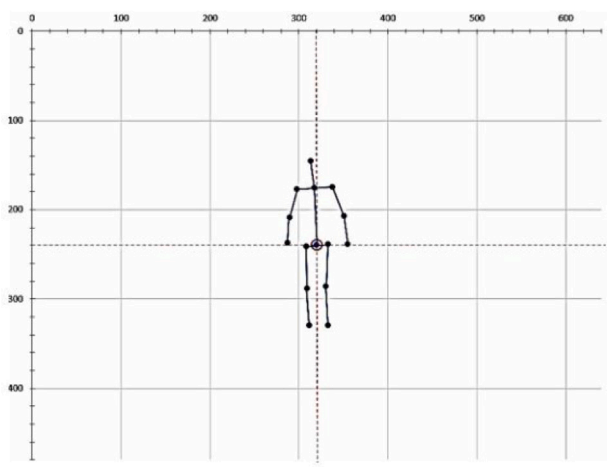

(b) After displacement, the location and number of joint points

Fig. 9. Relative position normalization.

13.4%. Furthermore, following interpolation and RP normalization, the occurrence of missing key points dwindled to just 1.8% of the total dataset.

3.5.3. Multi-headed transformer encoder

The main element within the transformer encoder is the multi-head self-attention mechanism. In the proposed approach, the transformer processes the input data in the form of an encoded sequence vector. This encoding is achieved through the utilization of skeleton features.

$$Shape = [S, N, D] \tag{13}$$

In Eq. (13), S denotes the sequence dimension, which pertains to the number of frames within each video. Similarly, N corresponds to the batch size, encompassing multiple videos, and D signifies the vector dimension, specifically set at 512 in this case (see Fig. 11).

The multi-head system manages scaled dot-product attention through multiple iterations. Within the encoder, this mechanism creates an attention-based representation capable of discerning individual pieces of information within an infinitely expansive context. This is achieved by concatenating and subsequently linearly transforming the distinct attention outputs.

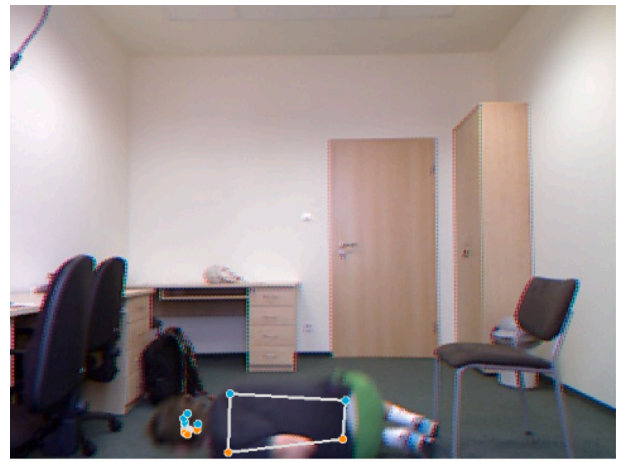

(a) Skeleton Detected from video frame

(b) Original Video frame

Fig. 10. Missing skeleton joints from a video frame.

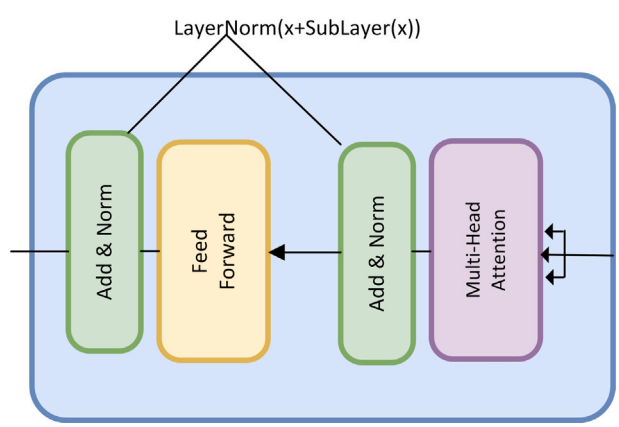

Fig. 11. Multi-head transformer encoder.

$$\text{MultiHead}(\mathbf{Q}, \mathbf{K}, \mathbf{V}) = \left[\text{ head }_1; \ldots; \text{ head }_h\right] \mathbf{W}^O$$
$$\text{where head }_i = \text{Attention}\left(\mathbf{Q}\mathbf{W}_i^Q, \mathbf{K}\mathbf{W}_i^K, \mathbf{V}\mathbf{W}_i^V\right)$$
$$\text{where } \mathbf{W}_i^Q, \mathbf{W}_i^K, \mathbf{W}_i^V, \text{ and } \mathbf{W}^O$$

Q, K, and V represent the query, key, and value vectors, respectively. Since Q, K, and V usually originate from the same source, this

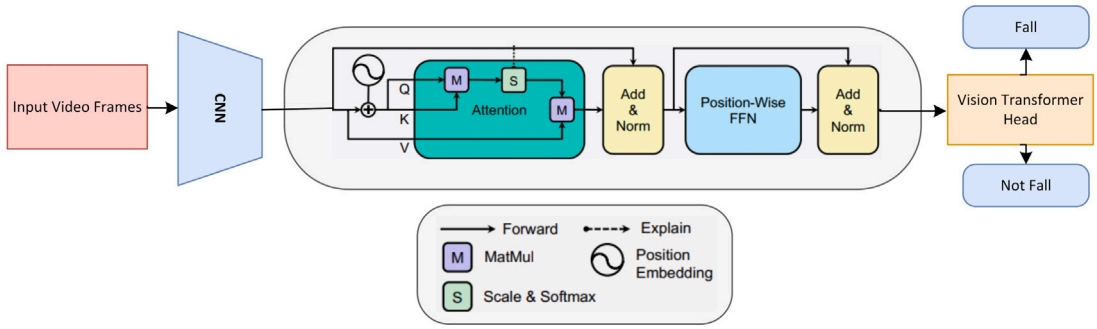

Fig. 12. TransPose vision transformer flow diagram.

strategy is also known as self-attention.

3.5.4. Linear transformation layer

To predict the outcome, we introduce a linear transformation layer into the skeletal regression process, supplementing the multi-headed transformer encoder. The final linear layer then forwards the output from the last pointwise feedforward layer to a classifier. This classifier distinguishes between fall and normal scenarios.

4. Transformer based pose estimation

In this study on human fall detection, Transformer-based pose estimation techniques have been employed. These techniques are utilized to obtain human skeleton points, which are subsequently used to train a transformer network for the detection of fall occurrences. To assess the performance of ViTPose and Transpose vision transformers, we have conducted experiments on the three distinct datasets.

4.1. TransPose vision transformer

Fig. 12 illustrates the Transpose Architecture, an important component of the proposed framework. The Transpose Architecture comprises three integral elements: a Convolutional Neural Network (CNN), employed for capturing low-level features; a Transformer encoder, harnessed to facilitate interaction between spatial and feature information; and a Head Network, tasked with heatmap prediction.

In the context of the architecture, we initiate the feature extraction process with a CNN, leveraging a pre-trained Imagenet model to capture salient image features. Subsequently, we introduce a standard Transformer architecture. However, for our specific task, we employ solely the encoder part. It is noteworthy that the primary objective is heatmap prediction, an encoding task exclusively reliant on the encoder's capabilities.

Upon receiving an input image, it is assumed that the CNN backbone yields a 2D feature tensor, which undergoes dimension transformation via a 1×1 convolutional layer. Following this, the image features are flattened into a sequence-based representation, thereby enabling further processing through multiple attention layers and feed-forward networks within the Transformer encoder.

A crucial innovation in this architecture involves the integration of a Head, appended to the Transformer encoder, to facilitate the prediction of keypoints' heatmaps. To achieve this, we initially reshape the output, subsequently employing a 1×1 convolutional layer to reduce the channel dimensions.

This sequence of operations encapsulates the essence of the proposed Transpose Architecture, harmonizing the strengths of CNNs and Transformers to address the intricate task of heatmap prediction.

4.2. VitPose vision transformer

We present a comprehensive methodology describing VitPose, a Vision Transformer-based model designed for human pose estimation as shown in the schematic representation in 13.

The initial stage of VitPose involves the processing of input video frames. These frames traverse through a Convolutional Neural Network (CNN) module, primed to localize individuals within the frames. Following this, an encoder module comes into play. Within the encoder, the images undergo embedding via patch embedding techniques. This operation facilitates the transformation of local image patches into compact representations, setting the stage for subsequent analysis.

The heart of the methodology lies in the successive utilization of multiple transformer layers within the encoder. Each layer is composed of a multiheaded self-attention mechanism coupled with a feed-forward layer. The multiheaded self-attention mechanism facilitates the model's grasp of complex relationships among different patches, while the feed-forward layer contributes to the extraction of salient features and patterns.

The subsequent phase employs a lightweight decoder to process the features extracted by the backbone network. These features are important for the localization of keypoints pertinent to the human pose. The decoder employs an efficient mechanism to map the features and subsequently predict the keypoints that define the pose configuration.

An important facet of VitPose is the training of the localized keypoints on the transformer network. This network, akin to the encoder, comprises multiheaded transformer layers, enhanced by linear layers and self-attention mechanisms. This sophisticated assembly operates in tandem to discern and categorize activities, particularly distinguishing between fall and non-fall actions

5. Experimental results

5.1. Experimentation setup

The training of the models took place on a computer system equipped with a 3.0 GHz Intel Core i5-9400 CPU and a Quadro P5000 GPU graphics card. The experiments used three separate fall datasets. The data was divided, with 70% allocated for training purposes and the remaining 30% reserved for testing and evaluation.

5.2. Datasets

5.2.1. UR-Fall

Data collection for the UR-Fall dataset was conducted by their authors using a Bluetooth-enabled inertial sensor along with two Kinect cameras, as detailed in Kwolek and Kepski (2014). This dataset encompasses observations of five individuals, each performing a total of seventy falls, including various scenarios such as falls from sitting and standing positions. Each individual's record includes depth, RGB, and accelerometer data captured from two cameras in standard room settings.

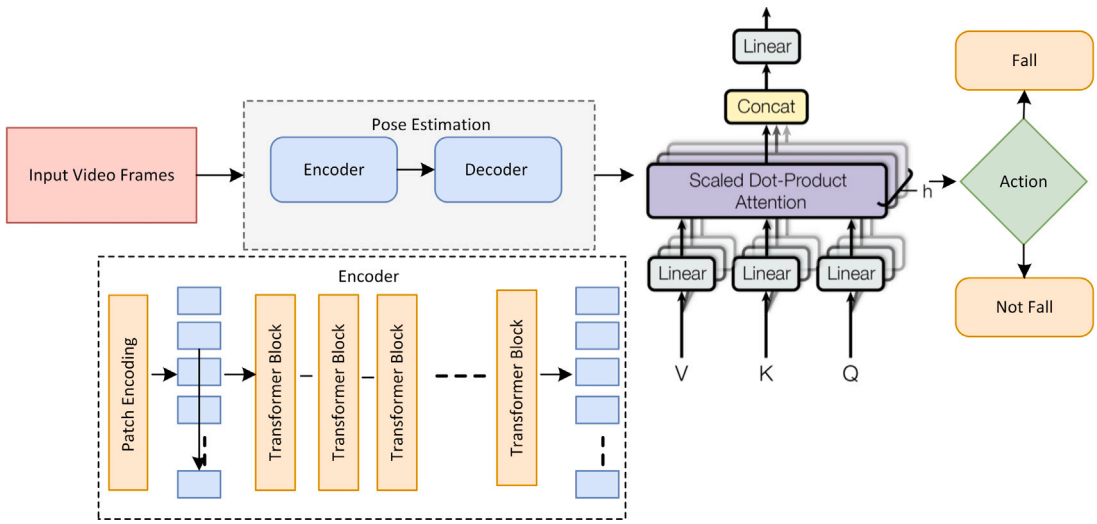

Fig. 13. VitPose vision transformer flow diagram.

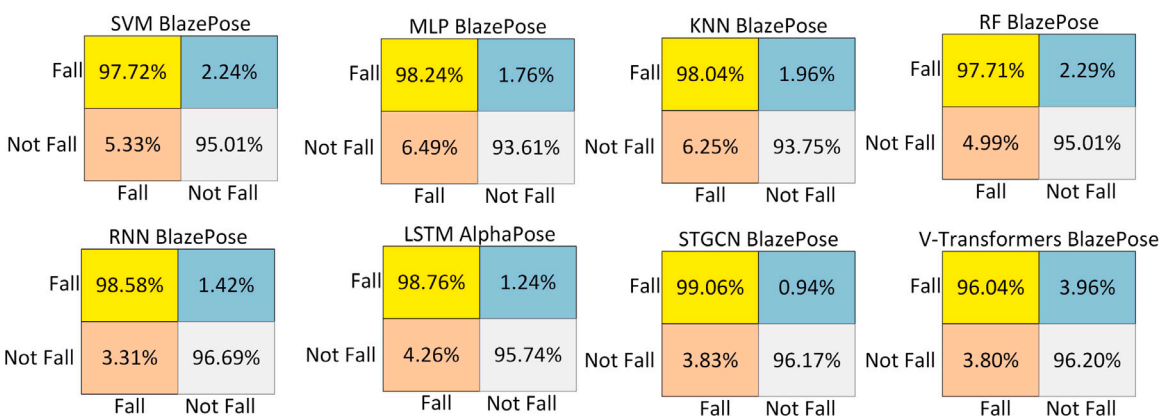

Fig. 14. Confusion matrix UR-Fall dataset.

5.2.2. UP-Fall

The UP-Fall dataset is described in Martínez-Villaseñor et al. (2019), which serves as our experimental dataset for evaluating and comparing results. It comprises data from 17 young, healthy individuals engaging in a total of 12 activities. These activities encompass five types of falls, in addition to seven common everyday human actions.

5.2.3. Le2i

This dataset poses certain challenges due to variations in lighting and occlusion. It should be noted that this dataset, as is the case of the previous two, is not composed of real-world actions, but it rather consists of staged scenarios featuring actors engaging in daily activities and simulating falls. It encompasses a collection of 191 video files captured in four distinct settings: home, coffee shop, workplace, and school. Data collection extends beyond traditional indoor environments, encompassing locations such as lecture rooms, offices, coffee rooms, and homes.

5.3. UR-Fall dataset results

We employed human pose estimation techniques for fall detection, utilizing various pose extractors to locate individuals for pose estimation. Subsequently, we trained models on these skeleton features. The results for the UR-Fall datasets, achieved through AlphaPose, OpenPose, BlazePose, OpenPifPaf, and HRNet, are presented in Table 3. In our experiments for the UR-Fall dataset, we employed multiple networks. Initially, we applied well-known machine learning classifiers to identify human fall activities, utilizing RF, KNN, MLP, and SVM classifiers paired with different pose extractors. Table 3 illustrates that BlazePose consistently yielded one of the highest performance among classifiers when applied to the UR-Fall Dataset. For example, BlazePose, in conjunction with a random forest classifier on the UR-Fall dataset, achieved the highest accuracy, amongst the different pose extractors, at 96.78%. Furthermore, we investigated an RNN to predict fall and non-fall sequences based on the UR-Fall dataset, where OpenPose exhibited superior results with an accuracy of 98.90%. As part of the study, we explored the application of LSTM, ST-GCN, and vision transformers with AlphaPose, OpenPose, BlazePose, OpenPifPaf, and HRnet. The confusion matrix corresponding to the UR-Fall dataset, featuring the best results obtained from classifiers, including RNN, LSTM, ST-GCN, and vision transformers, is given in Fig. 14.

5.4. UP-Fall dataset results

This study aimed to assess the efficacy of pose estimation for fall detection. To achieve this, we employed different datasets, each paired with different pose extractors and models. As illustrated in 4, we examined the UP-Fall dataset using AlphaPose, OpenPose, BlazePose, OpenPifPaf, and HRNet. Similarly, for the UR-FALL dataset, we initiated our analysis by employing machine learning classifiers for the detection of human fall activity (see Fig. 16).

Table 3
UR-fall dataset results with different pose extractors.

	AlphaPose		OpenPose		BlazePose		OpenPifPaf		HRNet	
	F1-score %	Accuracy %	F1-score %	Accuracy %	F1-score %	Accuracy %	F1-score %	Accuracy %	F1-score %	Accuracy %
RF	97.45	96.32	97.77	96.62	97.89	**96.78**	96.81	96.16	96.22	95.98
KNN	98.66	97.27	96.33	97.19	98.28	**97.39**	97.29	97.38	96.75	96.88
MLP	96.41	97.47	96.40	96.94	98.50	**97.49**	97.33	96.19	97.28	96.05
SVM	96..24	96.76	96.88	96.78	98.01	**97.01**	96.87	96.97	96.15	95.99
RNN	98.09	98.12	98.75	**98.90**	98.88	98.21	97.39	96.98	96.67	95.76
LSTM	98.83	**98.15**	97.18	97.77	98.14	97.98	98.77	96.62	96.34	96.21
ST-GCN	98.99	**98.43**	96.75	97.52	97.17	98.18	96.28	96.32	96.45	96.51
Vision Transformer	96.12	**96.88**	96.48	95.02	96.04	96.12	95.91	95.42	96.18	94.32

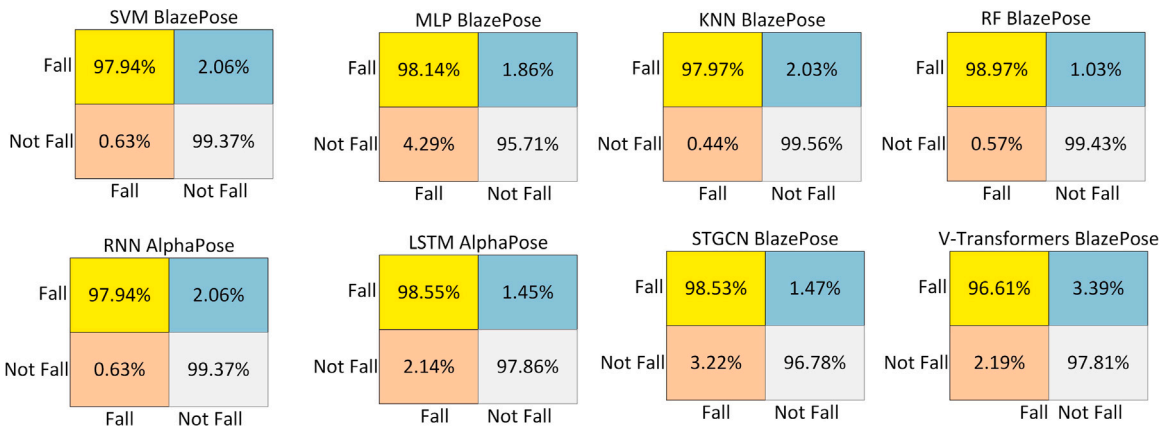

Fig. 15. Confusion matrix UP-Fall dataset.

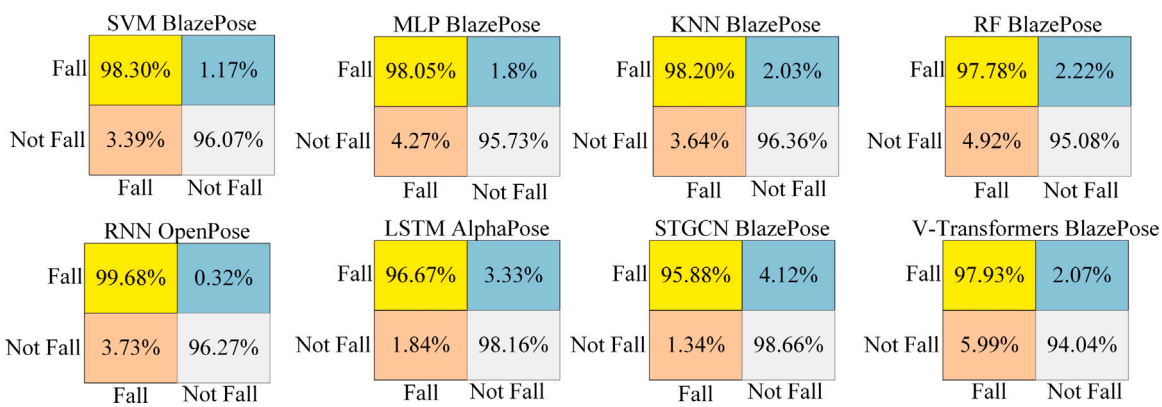

Fig. 16. Confusion matrix Le2i-Fall dataset.

Table 4
UP-fall dataset results with different pose extractors.

	AlphaPose		OpenPose		BlazePose		OpenPifPaf		HRNet	
	F1-score %	Accuracy %	F1-score %	Accuracy %	F1-score %	Accuracy %	F1-score %	Accuracy %	F1-score %	Accuracy %
RF	97.43	97.78	96.12	97.21	98.0	**99.33**	96.22	96.98	98.71	96.57
KNN	97.29	97.04	96.63	96.66	98.84	**98.60**	97.28	96.17	98.63	96.12
MLP	97.03	96.50	96.32	96.31	97.99	**98.73**	98.14	97.28	98.26	97.68
SVM	97.12	97.07	96.48	98.03	98.18	**98.97**	97.12	97.19	97.52	97.12
RNN	98.33	**98.11**	97.21	96.18	98.14	97.22	98.12	97.44	97.22	96.69
LSTM	97.79	96.66	99.02	**98.42**	98.74	97.43	98.10	96.43	97.32	96.38
ST-GCN	96.21	96.34	96.03	96.38	98.12	**98.02**	98.68	97.93	95.98	96.07
Vision Transformer	97.32	96.66	96.12	96.04	96.47	**97.36**	96.02	97.08	96.88	97.14

Table 5
Le2i fall dataset results with different pose extractors.

	AlphaPose		OpenPose		BlazePose		OpenPifPaf		HRNet	
	F1-score %	Accuracy %	F1-score %	Accuracy %	F1-score %	Accuracy %	F1-score %	Accuracy %	F1-score %	Accuracy %
RF	98.44	97.12	96.67	97.08	98.24	**97.23**	97.81	96.18	97.52	96.97
KNN	98.16	97.37	97.53	96.16	98.76	**97.96**	97.28	97.05	98.75	96.28
MLP	97.48	96.32	97.51	96.11	98.48	**97.59**	97.41	96.81	98.16	97.05
SVM	98.24	97.66	96.18	96.41	98.74	**97.92**	97.02	97.88	97.51	97.84
RNN	98.67	98.34	99.31	**98.90**	97.44	97.88	97.23	96.62	96.22	95.55
LSTM	97.97	**97.08**	96.78	97.19	98.44	97.13	98.53	96.83	97.12	96.71
ST-GCN	96.71	96.14	96.90	96.68	95.57	**97.79**	96.42	97.13	95.83	96.61
Vision Transformer	97.82	96.93	97.43	96.42	98.03	**97.00**	96.87	96.61	96.14	96.32

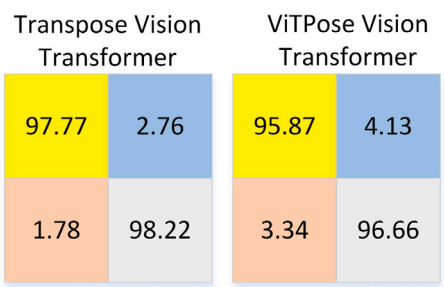

Fig. 17. Confusion matrix TransPose and VitPose.

5.5. Fall detection vision transformers

Our investigation involved the integration of various pose extraction methods with machine learning classifiers, including RF (Random Forest), KNN (K-Nearest Neighbors), MLP (Multi-Layer Perceptron), and SVM (Support Vector Machine), within the framework of machine learning algorithms. In the context of the UP-Fall dataset, BlazePose emerged as the best performer. Particularly impressive was the outcome achieved when pairing BlazePose with RF, where we attained an accuracy rate of 99.33%. Expanding our analysis, we studied the application of recurrent neural networks (RNNs) and Long Short-Term Memory (LSTM) networks, trained on the UP-Fall dataset, with the primary objective of predicting fall and non-fall sequences. In this regard, AlphaPose exhibited good performance, achieving an accuracy rate of 98.11% with RNNs and 98.42% with LSTMs.

In the context of the UP-Fall dataset, we looked at the capabilities of a diverse set of pose extractors, including AlphaPose, OpenPose, BlazePose, OpenPifPaf, and HRnet, alongside the incorporation of ST-GCNs and Vision Transformers. The multifaceted analysis resulted in a comprehensive evaluation of fall detection. The results obtained from these configurations are visually represented in the confusion matrix, as depicted in Fig. 15. It is worth noting that RNN, LSTM, ST-GCN, and Vision Transformers consistently exhibited the most promising outcomes within this dataset. This analysis highlights the effectiveness of comparing specific pose extraction techniques with well-suited classifiers, shedding light on the potential for robust fall detection methodologies. The UP-Fall dataset, in particular, showcases BlazePose's capabilities when paired with RF, as well as AlphaPose's appropriateness with both RNNs and LSTMs. Furthermore, the comprehensive evaluation of pose extraction methodologies underscores the versatility and performance of RNN, LSTM, ST-GCN, and Vision Transformers within the context of fall detection, as visually represented in the confusion matrix.

5.6. Fall detection Le2i dataset results

The Le2i dataset offers a valuable resource for discerning instances of human falls through diverse methodologies for estimating a person's pose. In this section, we present an analysis of the results obtained when employing different backbone and head networks on the Le2i dataset, as detailed in 5.

Furthering our investigation, we explore the use of posture estimation techniques, specifically Recurrent Neural Networks (RNNs), Long Short-Term Memory (LSTM) networks, Spatio-Temporal Graph Convolutional Networks (ST-GCN), and Vision Transformers, to distinguish falls from other events within the Le2i dataset. The performance of these techniques, in combination with posture extractors, is also presented in 5. It is evident that OpenPose, in conjunction with AlphaPose, yields commendable results when paired with RNN and LSTM networks.

However, it is noteworthy that employing BlazePose, ST-GCN, and Vision Transformers consistently yields superior results compared to other configurations. These findings underscore the robustness and efficacy of these methodologies for fall detection tasks. To provide a more comprehensive visualization of our best results, we present the confusion matrix in 17.

Using different ways to estimate a person's position, the Le2i dataset can be used to find out when a person has fallen. The results of the Le2i dataset with different backbone and head networks are shown in Table 5. To begin, machine learning classifiers were applied using posture extractors like AlphaPose, OpenPose, BlazePose, etc., to find skeleton points for training the various machine learning classifiers. Table 5 shows the outcomes of machine learning classifiers and other networks applied to the Le2i dataset. BlazePose is effective with machine learning classifiers. Of all the different classifiers, KNN gives the highest results (97.96%). Using posture estimation techniques, we also used RNN, LSTM, ST-GCN, and vision transformers to detect falls. Table 5 shows that OpenPose with AlphaPose performs well with RNN and LSTM when applied to the Le2i dataset. Using Blazepose, ST-GCN, and Vision, Transformers achieved better results than others. The confusion matrix in Fig. 17 shows the best results.

5.7. Transpose and VitPose results

In this study, we employed a novel approach based on Transformer networks, utilizing them in both the backbone and head network. For pose estimation, we leveraged the Transpose network and VitPose, subsequently integrating a Transformer network as the head to discern between fall and non-fall activities. An evaluation was conducted on: UR-Fall, UP-Fall, and Le2i Fall datasets.

Initially, we applied the Transpose network to the UR-Fall dataset, yielding good results. We achieved an F1 score of 97.72% and an accuracy rate of 97.43%. Turning to the UP-Fall dataset, we observed a performance of 95.33% for F1 score and 96.76% for accuracy. Similarly, on the Le2i Fall dataset, the approach exhibited a strong performance with an F1 score of 95.77% and an accuracy rate of 95.28%.

In parallel, we explored the performance of VitPose on fall detection. Employing this architecture on the UR-Fall dataset yielded a competitive F1 score of 95.22% and an accuracy rate of 95.36%. On the

Table 6
Fall dataset results with transformers.

Datasets	Transpose transformer		ViTPose transformer	
	F1-score %	Accu %	F1-score %	Accu %
UR-Fall	**97.72**	**97.43**	95.22	95.36
UP-Fall	95.33	96.76	**96.25**	**96.44**
Le2i	95.77	95.28	95.31	96.42

Table 7
Comparisons with state-of-the-art methods.

References	Dataset	Methodology	Skeleton Sequence	Accuracy%
Chhetri et al. (2021)	UR-Fall	CNN	Yes	95.00
Chhetri et al. (2021)	UR-Fall	CNN	X	94.00
Sultana et al. (2021)	UR-Fall	CNN-SVM	X	94.96
Shu and Shu (2021)	UR-Fall	SVM	Yes	91.07
Su et al. (2024)	UR-Fall	3D-CNN	Yes	**94.84**
Ours	**UR-Fall**	ST-GCN	Yes	**98.43**
Ours	**UR-Fall**	TransPose	Yes	**96.44**
Ramirez et al. (2021d)	UP-Fall	RF	Yes	99.34
Ramirez et al. (2021b)	UP-Fall	KNN	Yes	98.84
Ramirez et al. (2022)	UP-Fall	RF	Yes	**99.91**
Espinosa et al. (2019)	UP-Fall	CNN	No	95.64
Saurav et al. (2022a)	UP-FallV2	SAB-BiLSTM	No	100
Saurav et al. (2022b)	UP-FallV2	Bi-ConvLSTM+FC	No	100
Ours	**UP-Fall**	RF	Yes	99.33
Ours	**UP-Fall**	RNN	Yes	98.90
Yin et al. (2021)	Le2i	ML classifier	No	96.91
Martínez-Villaseñor et al. (2019)	Le2i	Adaboost	X	79.31
Wang et al. (2020)	Le2i	ST-GCN	Yes	96.86
Kaur et al. (2024)	Le2i	HHCC	No	89.21
Ours	**Le2i**	RNN	Yes	**98.90**
Ours	**Le2i**	VitPose	Yes	**96.42**

UP-Fall dataset, we attained an F1 score of 96.25% and an accuracy rate of 96.44%. For the Le2i dataset, the VitPose-based approach achieved an F1 score of 95.31% and an accuracy rate of 95.42%.

The full results of the Transformer-based networks across the three datasets are presented in Table 6. Further insights into the network performance are depicted in Fig. 17, showing the confusion matrices for both networks. It is pertinent to note that, for conciseness, we present only the confusion matrix of the best-performing network.

These results underscore the viability and efficacy of employing Transformer-based architectures, particularly when coupled with advanced pose estimation techniques, for robust human fall detection across diverse datasets.

5.8. Comparison with existing work

In our study, we evaluated the performance of various fall detection methodologies across the UR-Fall, UP-Fall, and Le2i datasets. The results are summarized in Table 7. Chhetri et al. (2021) employed a CNN-based method on the UR-Fall dataset, achieving an accuracy of 95.00%. Another CNN-based method by Chhetri et al. (2021) reported a slightly lower accuracy of 94.00%. A combined CNN-SVM approach by Sultana et al. (2021) achieved 94.96%, while (Shu and Shu, 2021) used an SVM, resulting in 91.07%. Su et al. (2024) utilized a 3D-CNN, highlighting an accuracy of 94.84%. In contrast, our methods demonstrated superior performance, with the ST-GCN approach achieving 98.43% and the TransPose approach achieving 96.44% on the same dataset.

For the UP-Fall dataset, Ramirez et al. (2021d) and Ramirez et al. (2022) both employed Random Forest (RF) classifiers, achieving 99.33% accuracy, respectively. A KNN-based approach by Ramirez et al. (2021b) reported 98.84% accuracy, while Martínez-Villaseñor et al. (2019) used MLP and CNN, achieving accuracies of 95.0% and 95.1%, respectively. Espinosa et al. (2019) utilized a CNN-based method with optical flow preprocessing on the UP-Fall dataset, achieving an F1-score of 97.43% and an accuracy of 95.64%. Saurav et al. (2022a) achieved 100% accuracy with SAB-BiLSTM on the UP-FallV2 dataset and Saurav et al. (2022b) used Bi-ConvLSTM+FC approach and achieved 100% accuracy.

Although these methods achieve impressive results, they do not use pose-estimation-based techniques, which offer significant advantages in terms of privacy. In our study, we utilized pose estimation techniques (e.g., Vision Transformers with ViTpose) for fall detection, as these approaches avoid the use of identifiable video data, addressing significant privacy concerns in real-world scenarios. Our RF-based method achieved a comparable accuracy of 99.33%, while the ViTpose approach attained 96.44%. The proposed technique for detecting human falls, combining Vision Transformers (ViTpose) with pose estimation algorithms, has several advantages. It demonstrates excellent performance and outperforms state-of-the-art methods on the UP-Fall dataset. Its ability to capture spatial and temporal linkages through pose estimation makes it highly effective for complex scenarios. Moreover, its flexibility to incorporate multiple classification algorithms broadens its applicability across diverse use cases and datasets.

On the Le2i dataset, a machine learning classifier by Yin et al. (2021) achieved 96.91% accuracy. The Adaboost method by Martínez-Villaseñor et al. (2019) reported a significantly lower accuracy of 79.31%. An ST-GCN approach by Wang et al. (2020) achieved 96.86%, and a hybrid Haar Cascade Classifier by Kaur et al. (2024) attained 89.21%. Our proposed methods demonstrated superior performance, with RNN achieving 98.90% and ViTpose achieving 96.42%.

However, some disadvantages are associated with this method. Significant computing resources are needed for training and inference with vision transformers, potentially limiting their use in resource-constrained contexts. Delays in development may be caused by the extended training period necessary for these models. The performance of pose estimation algorithms is also highly dependent on the quality and quantity of training data. Despite these challenges, the privacy-preserving nature and adaptability of pose-estimation-based approaches make them an essential direction for real-world fall detection applications.

6. Conclusion

Our study presented an extensive exploration of fall detection methodologies, incorporating a wide array of pose estimation techniques and neural network architectures. Specifically, we leveraged

AlphaPose, OpenPose, BlazePose, OpenPifPaf, and HRNet to extract human skeletons from frame data, forming the foundation for subsequent analysis. Within this framework, we integrated machine learning classifiers, including RNN, LSTM, ST-GCN, and Vision Transformers, to identify fall events. We expanded the scope of our investigation by introducing advanced pose estimation frameworks, ViTPose and TransPose. Our experimentation spanned three diverse datasets, facilitating a comprehensive evaluation of fall detection techniques. Across various pose extractors, we conducted detailed analyses, training classifiers on distinct skeleton points generated by each method. On the UR-Fall dataset, BlazePose showed robust performance with machine learning classifiers, while RNNs demonstrated excellence with alternative pose extractors. AlphaPose consistently delivered competitive results, and ST-GCN achieved good accuracy, notably at 98.43%. For the UP-Fall dataset, BlazePose, in combination with machine learning classifiers, ST-GCNs, and Vision Transformers, consistently outperformed alternative configurations. OpenPose exhibited synergy with LSTMs, while AlphaPose excelled with RNNs, reaching an impressive accuracy rate of 99.33% when paired with Random Forest. Similar trends were observed with the Le2i dataset, where BlazePose continued to deliver strong performance across machine learning classifiers, ST-GCN, and Vision Transformers. AlphaPose again demonstrated proficiency with LSTM and RNN configurations, with OpenPose yielding the highest accuracy in tandem with RNN. Looking ahead, we plan to extend our research to real-world scenarios, including settings with multiple individuals, such as shopping malls, public spaces, and residential areas. Additionally, we are looking to implementing edge computing platforms to enable real-time processing, further advancing the practical applications of these fall detection methodologies.

CRediT authorship contribution statement

Ali Raza: Writing – original draft, Validation, Software, Methodology, Investigation, Formal analysis, Data curation. **Muhammad Haroon Yousaf:** Writing – review & editing, Supervision, Resources, Project administration, Methodology, Funding acquisition, Conceptualization. **Waqar Ahmad:** Writing – review & editing, Visualization, Project administration, Investigation, Data curation. **Sergio A. Velastin:** Writing – review & editing, Visualization, Supervision. **Serestina Viriri:** Writing – review & editing, Validation, Supervision, Investigation.

Declaration of competing interest

The authors declare that they have no known competing financial interests or personal relationships that could have appeared to influence the work reported in this paper.

Acknowledgment

The authors acknowledge the Higher Education Commission of Pakistan funding for this project through a grant titled "Establishment of National Centre of Robotics and Automation" under Grant No. DF-1009-31 for this research work.

Data availability

Data will be made available on request.

References

Abdullah, I., Javed, A., Malik, K.M., Malik, G., 2023. DeepInfusion: A dynamic infusion based-neuro-symbolic AI model for segmentation of intracranial aneurysms. Neurocomputing 551, 126510.

Alarifi, A., Alwadain, A., 2021. Killer heuristic optimized convolution neural network-based fall detection with wearable IoT sensor devices. Measurement 167, 108258.

Ammar, B., Rokbani, N., Alimi, A.M., 2011. Learning system for standing human detection. In: 2011 IEEE International Conference on Computer Science and Automation Engineering, vol. 4, IEEE, pp. 300–304.

Apicella, A., Snidaro, L., 2021. Deep neural networks for real-time remote fall detection. In: International Conference on Pattern Recognition. Springer, pp. 188–201.

Aziz, O., Musngi, M., Park, E.J., Mori, G., Robinovitch, S.N., 2017. A comparison of accuracy of fall detection algorithms (threshold-based vs. machine learning) using waist-mounted tri-axial accelerometer signals from a comprehensive set of falls and non-fall trials. Med. Biol. Eng. Comput. 55 (1), 45–55.

Banerjee, D., Daigle, C.L., Dong, B., Wurtz, K., Newberry, R.C., Siegford, J.M., Biswas, S., 2014. Detection of jumping and landing force in laying hens using wireless wearable sensors. Poult. Sci. 93 (11), 2724–2733.

Berlin, S.J., John, M., 2021. Vision based human fall detection with siamese convolutional neural networks. J. Ambient Intell. Humaniz. Comput. 1–12.

Cai, X., Liu, X., An, M., Han, G., 2021. Vision-based fall detection using dense block with multi-channel convolutional fusion strategy. IEEE Access 9, 18318–18325.

Cao, Z., Hidalgo Martinez, G., Simon, T., Wei, S., Sheikh, Y.A., 2019. OpenPose: Realtime multi-person 2D pose estimation using part affinity fields. IEEE Trans. Pattern Anal. Mach. Intell..

Cao, Z., Simon, T., Wei, S.-E., Sheikh, Y., 2017. Realtime multi-person 2d pose estimation using part affinity fields. In: Proceedings of the IEEE Conference on Computer Vision and Pattern Recognition. pp. 7291–7299.

Chang, W.-J., Hsu, C.-H., Chen, L.-B., 2021. A pose estimation-based fall detection methodology using artificial intelligence edge computing. IEEE Access 9, 129965–129976.

Charfi, I., Miteran, J., Dubois, J., Atri, M., Tourki, R., 2013. Optimized spatio-temporal descriptors for real-time fall detection: comparison of support vector machine and adaboost-based classification. J. Electron. Imaging 22 (4), 041106.

Chen, G., Duan, X., 2021. Vision-based elderly fall detection algorithm for mobile robot. In: 2021 IEEE 4th International Conference on Electronics Technology. ICET, IEEE, pp. 1197–1202.

Cheng, B., Xiao, B., Wang, J., Shi, H., Huang, T.S., Zhang, L., 2020. HigherHRNet: Scale-aware representation learning for bottom-up human pose estimation. In: CVPR.

Chhetri, S., Alsadoon, A., Al-Dala'in, T., Prasad, P., Rashid, T.A., Maag, A., 2021. Deep learning for vision-based fall detection system: Enhanced optical dynamic flow. Comput. Intell. 37 (1), 578–595.

Clemente, J., Li, F., Valero, M., Song, W., 2019. Smart seismic sensing for indoor fall detection, location, and notification. IEEE J. Biomed. Health Inform. 24 (2), 524–532.

Daga, B., Ghatol, A., Thakare, V., 2017. Silhouette based human fall detection using multimodal classifiers for content based video retrieval systems. In: 2017 International Conference on Intelligent Computing, Instrumentation and Control Technologies. ICICICT, IEEE, pp. 1409–1416.

Dentamaro, V., Impedovo, D., Pirlo, G., 2021. Fall detection by human pose estimation and kinematic theory. In: 2020 25th International Conference on Pattern Recognition. ICPR, IEEE, pp. 2328–2335.

Du, C., Jin, R., Tang, H., Jiang, Q., He, Z., 2024. SKIP: Accurate fall detection based on skeleton keypoint association and critical feature perception. IEEE Sens. J..

Ergüder, H., Uzun, T., Baday, M., 2024. Advancing fall detection utilizing skeletal joint image representation and deformable layers. Image Anal. Stereol. 43 (1), 97–107.

Espinosa, R., Ponce, H., Gutiérrez, S., Martínez-Villaseñor, L., Brieva, J., Moya-Albor, E., 2019. A vision-based approach for fall detection using multiple cameras and convolutional neural networks: A case study using the UP-fall detection dataset. Comput. Biol. Med. 115, 103520.

Fang, H.-S., Xie, S., Tai, Y.-W., Lu, C., 2017. RMPE: Regional multi-person pose estimation. In: ICCV.

Fatima, M., Yousaf, M.H., Yasin, A., Velastin, S.A., 2021. Unsupervised fall detection approach using human skeletons. In: 2021 International Conference on Robotics and Automation in Industry. ICRAI, IEEE, pp. 1–6.

Fei, K., Wang, C., Zhang, J., Liu, Y., Xie, X., Tu, Z., 2023. Flow-pose net: An effective two-stream network for fall detection. Vis. Comput. 39 (6), 2305–2320.

Galvão, Y.M., Portela, L., Ferreira, J., Barros, P., Fagundes, O.A.D.A., Fernandes, B.J., 2021. A framework for anomaly identification applied on fall detection. IEEE Access 9, 77264–77274.

Guan, Z., Li, S., Cheng, Y., Man, C., Mao, W., Wong, N., Yu, H., 2021. A video-based fall detection network by spatio-temporal joint-point model on edge devices. In: 2021 Design, Automation & Test in Europe Conference & Exhibition. DATE, IEEE, pp. 422–427.

Hasan, M.M., Islam, M.S., Abdullah, S., 2019. Robust pose-based human fall detection using recurrent neural network. In: 2019 IEEE International Conference on Robotics, Automation, Artificial-Intelligence and Internet-of-Things. RAAICON, IEEE, pp. 48–51.

Hasib, R., Khan, K.N., Yu, M., Khan, M.S., 2021. Vision-based human posture classification and fall detection using convolutional neural network. In: 2021 International Conference on Artificial Intelligence. ICAI, IEEE, pp. 74–79.

Hussain, F., Hussain, F., Ehatisham-ul Haq, M., Azam, M.A., 2019. Activity-aware fall detection and recognition based on wearable sensors. IEEE Sens. J. 19 (12), 4528–4536.

Inturi, A.R., Manikandan, V., Garrapally, V., 2023. A novel vision-based fall detection scheme using keypoints of human skeleton with long short-term memory network. Arab. J. Sci. Eng. 48 (2), 1143–1155.

Jeong, S., Kang, S., Chun, I., 2019. Human-skeleton based fall-detection method using LSTM for manufacturing industries. In: 2019 34th International Technical Conference on Circuits/Systems, Computers and Communications. ITC-CSCC, IEEE, pp. 1–4.

Kang, Y., Kang, H., Kim, J., 2021a. Fall detection method based on pose estimation using GRU. In: International Conference on Software Engineering, Artificial Intelligence, Networking and Parallel/Distributed Computing. Springer, pp. 169–179.

Kang, Y.-k., Kang, H.-Y., Kim, J.-B., 2021b. A study of fall detection system using context cognition method. In: 2021 21st ACIS International Winter Conference on Software Engineering, Artificial Intelligence, Networking and Parallel/Distributed Computing. SNPD-Winter, IEEE, pp. 79–83.

Kang, Y.K., Kang, H.Y., Weon, D.S., 2021c. Human skeleton keypoints based fall detection using GRU. J. Korea Acad. Ind. Cooperation Soc. 22 (2), 127–133.

Kaur, N., Rani, S., Kaur, S., 2024. Real-time video surveillance based human fall detection system using hybrid haar cascade classifier. Multimedia Tools Appl. 1–19.

Kavya, G., Kumar, C.S., Dhanush, C., Kruthika, J., 2021. Human fall detection using video surveillance. ACS J. Sci. Eng. 1 (1), 1–10.

Keskes, O., Noumeir, R., 2021. Vision-based fall detection using ST-GCN. IEEE Access 9, 28224–28236.

Kreiss, S., Bertoni, L., Alahi, A., 2021. OpenPifPaf: Composite fields for semantic keypoint detection and spatio-temporal association. IEEE Trans. Intell. Transp. Syst..

Kudo, Y., Aoki, Y., 2017. Dilated convolutions for image classification and object localization. In: 2017 Fifteenth IAPR International Conference on Machine Vision Applications. MVA, IEEE, pp. 452–455.

Kwolek, B., Kepski, M., 2014. Human fall detection on embedded platform using depth maps and wireless accelerometer. Comput. Methods Programs Biomed. 117 (3), 489–501.

Kwon, S.B., Park, J.-H., Kwon, C., Kong, H.J., Hwang, J.Y., Kim, H.C., 2019. An energy-efficient algorithm for classification of fall types using a wearable sensor. IEEE Access 7, 31321–31329.

Lao, S., Wang, D., Zhang, H., et al., 2016. Human running detection: Benchmark and baseline. Comput. Vis. Image Underst. 153, 143–150.

Leite, G.V., da Silva, G.P., Pedrini, H., 2021. Three-stream convolutional neural network for human fall detection. In: Deep Learning Applications, Volume 2. Springer, pp. 49–80.

Lin, C.-B., Dong, Z., Kuan, W.-K., Huang, Y.-F., 2020. A framework for fall detection based on openpose skeleton and lstm/gru models. Appl. Sci. 11 (1), 329.

Lin, B.-S., Su, J.-S., Chen, H., Jan, C.Y., 2013. A fall detection system based on human body silhouette. In: 2013 Ninth International Conference on Intelligent Information Hiding and Multimedia Signal Processing. IEEE, pp. 49–52.

Liu, Z., Cao, Y., Cui, L., Song, J., Zhao, G., 2018. A benchmark database and baseline evaluation for fall detection based on wearable sensors for the internet of medical things platform. IEEE Access 6, 51286–51296.

Liu, C., Hu, Y., Li, Y., Song, S., Liu, J., 2017. PKU-MMD: A large scale benchmark for continuous multi-modal human action understanding. arXiv preprint arXiv:1703.07475.

Liu, C., Lv, J., Zhao, X., Li, Z., Yan, Z., Shi, X., 2021. A novel key point trajectory model for fall detection from RGB-D videos. In: 2021 IEEE 24th International Conference on Computer Supported Cooperative Work in Design. CSCWD, IEEE, pp. 1021–1026.

Lotfi, A., Albawendi, S., Powell, H., Appiah, K., Langensiepen, C., 2018. Supporting independent living for older adults; employing a visual based fall detection through analysing the motion and shape of the human body. IEEE Access 6, 70272–70282.

Lugaresi, C., Tang, J., Nash, H., McClanahan, C., Uboweja, E., Hays, M., Zhang, F., Chang, C.-L., Yong, M.G., Lee, J., et al., 2019. Mediapipe: A framework for building perception pipelines. arXiv preprint arXiv:1906.08172.

Ma, X., Wang, H., Xue, B., Zhou, M., Ji, B., Li, Y., 2014. Depth-based human fall detection via shape features and improved extreme learning machine. IEEE J. Biomed. Health Inf. 18 (6), 1915–1922.

Martínez-Villaseñor, L., Ponce, H., Brieva, J., Moya-Albor, E., Núñez-Martínez, J., Peñafort-Asturiano, C., 2019. UP-fall detection dataset: A multimodal approach. Sensors 19 (9), 1988.

Mekruksavanich, S., Hnoohom, N., Jitpattanakul, A., 2018. Smartwatch-based sitting detection with human activity recognition for office workers syndrome. In: 2018 International ECTI Northern Section Conference on Electrical, Electronics, Computer and Telecommunications Engineering. ECTI-NCON, IEEE, pp. 160–164.

Murad, A., Pyun, J.-Y., 2017. Deep recurrent neural networks for human activity recognition. Sensors 17 (11), 2556.

Nguyen, T.-T., Cho, M.-C., Lee, T.-S., 2009. Automatic fall detection using wearable biomedical signal measurement terminal. In: 2009 Annual International Conference of the Ieee Engineering in Medicine and Biology Society. IEEE, pp. 5203–5206.

Nguyen, V.D., Pham, P.N., Nguyen, X.B., Tran, T.M., Nguyen, M.Q., 2021. Incorporation of panoramic view in fall detection using omnidirectional camera. In: The International Conference on Intelligent Systems & Networks. Springer, pp. 313–318.

Nho, Y.-H., Lim, J.G., Kwon, D.-S., 2020. Cluster-analysis-based user-adaptive fall detection using fusion of heart rate sensor and accelerometer in a wearable device. IEEE Access 8, 40389–40401.

Ogawa, Y., Naito, K., 2020. Fall detection scheme based on temperature distribution with IR array sensor. In: 2020 IEEE International Conference on Consumer Electronics. ICCE, IEEE, pp. 1–5.

Pham, T.N., Vo, D.H., 2021. Aging population and economic growth in developing countries: a quantile regression approach. Emerg. Mark. Finance Trade 57 (1), 108–122.

Pishchulin, L., Insafutdinov, E., Tang, S., Andres, B., Andriluka, M., Gehler, P.V., Schiele, B., 2016. Deepcut: Joint subset partition and labeling for multi person pose estimation. In: Proceedings of the IEEE Conference on Computer Vision and Pattern Recognition. pp. 4929–4937.

Ramirez, H., Velastin, S.A., Aguayo, P., Fabregas, E., Farias, G., 2022. Human activity recognition by sequences of skeleton features. Sensors 22 (11), 3991.

Ramirez, H., Velastin, S.A., Fabregas, E., Meza, I., Makris, D., Farias, G., 2021a. Fall Detection Using Human Skeleton Features. IET.

Ramirez, H., Velastin, S.A., Fabregas, E., Meza, I., Makris, D., Farias, G., 2021b. Fall Detection Using Human Skeleton Features. IET.

Ramirez, H., Velastin, S.A., Meza, I., Fabregas, E., Makris, D., Farias, G., 2021c. Fall detection and activity recognition using human skeleton features. IEEE Access 9, 33532–33542.

Ramirez, H., Velastin, S.A., Meza, I., Fabregas, E., Makris, D., Farias, G., 2021d. Fall detection and activity recognition using human skeleton features. IEEE Access 9, 33532–33542.

Saurav, S., Saini, R., Singh, S., 2022a. A dual-stream fused neural network for fall detection in multi-camera and 360 videos. Neural Comput. Appl. 34 (2), 1455–1482.

Saurav, S., Saini, R., Singh, S., 2022b. Vision-based techniques for fall detection in 360 videos using deep learning: Dataset and baseline results. Multimedia Tools Appl. 81 (10), 14173–14216.

Seredin, O.S., Kopylov, A.V., Surkov, E.E., Huang, S.-C., 2023. The basic assembly of skeletal models in the fall detection problem. Компьютерная оптика 47 (2), 323–334.

Shu, F., Shu, J., 2021. An eight-camera fall detection system using human fall pattern recognition via machine learning by a low-cost android box. Sci. Rep. 11 (1), 1–17.

Su, C., Wei, J., Lin, D., Kong, L., Guan, Y.L., 2024. A novel model for fall detection and action recognition combined lightweight 3D-CNN and convolutional LSTM networks. Pattern Anal. Appl. 27 (1), 3.

Sultana, A., Deb, K., Dhar, P.K., Koshiba, T., 2021. Classification of indoor human fall events using deep learning. Entropy 23 (3), 328.

Taramasco, C., Rodenas, T., Martinez, F., Fuentes, P., Munoz, R., Olivares, R., De Albuquerque, V.H.C., Demongeot, J., 2018. A novel monitoring system for fall detection in older people. IEEE Access 6, 43563–43574.

Tran, T.-H., Le, T.-L., Pham, D.-T., Hoang, V.-N., Khong, V.-M., Tran, Q.-T., Nguyen, T.-S., Pham, C., 2018. A multi-modal multi-view dataset for human fall analysis and preliminary investigation on modality. In: 2018 24th International Conference on Pattern Recognition. ICPR, IEEE, pp. 1947–1952.

Tran, T.-H., Nguyen, D.T., Nguyen, T.P., 2021. Human posture classification from multiple viewpoints and application for fall detection. In: 2020 IEEE Eighth International Conference on Communications and Electronics. ICCE, IEEE, pp. 262–267.

Tsai, T.-H., Hsu, C.-W., 2019. Implementation of fall detection system based on 3D skeleton for deep learning technique. IEEE Access 7, 153049–153059.

Varshney, N., Bakariya, B., Kushwaha, A.K.S., Khare, M., 2021. Rule-based multi-view human activity recognition system in real time using skeleton data from RGB-D sensor. Soft Comput. 1–17.

Wang, J., Chen, Y., Hao, S., Peng, X., Hu, L., 2019. Deep learning for sensor-based activity recognition: A survey. Pattern Recognit. Lett. 119, 3–11.

Wang, K., Li, X., Yang, J., Wu, J., Li, R., 2021. Temporal action detection based on two-stream You Only Look Once network for elderly care service robot. Int. J. Adv. Robot. Syst. 18 (4), 17298814211038342.

Wang, B.-H., Yu, J., Wang, K., Bao, X.-Y., Mao, K.-M., 2020. Fall detection based on dual-channel feature integration. IEEE Access 8, 103443–103453.

Wisesa, I.W.W., Mahardika, G., 2019. Fall detection algorithm based on accelerometer and gyroscope sensor data using recurrent neural networks. In: IOP Conference Series: Earth and Environmental Science, vol. 258, (1), IOP Publishing, 012035.

World Health Organization and World Health Organization. Ageing and Life Course Unit, 2008. WHO Global Report on Falls Prevention in Older Age. World Health Organization.

Yin, J., Han, J., Xie, R., Wang, C., Duan, X., Rong, Y., Zeng, X., Tao, J., 2021. Mc-lstm: Real-time 3d human action detection system for intelligent healthcare applications. IEEE Trans. Biomed. Circuits Syst. 15 (2), 259–269.

Yu, X., Jang, J., Xiong, S., 2021. A large-scale open motion dataset (KFall) and benchmark algorithms for detecting pre-impact fall of the elderly using wearable inertial sensors. Front. Aging Neurosci. 399.

Zhang, S., Wei, Z., Nie, J., Huang, L., Wang, S., Li, Z., 2017. A review on human activity recognition using vision-based method. J. Healthc. Eng. 2017.

Zhu, H., Du, J., Wang, L., Han, B., Jia, Y., 2021a. A vision-based fall detection framework for the elderly in a room environment using motion features and DAG-SVM. Int. J. Comput. Appl. 1–9.

Zhu, N., Zhao, G., Zhang, X., Jin, Z., 2021b. Falling motion detection algorithm based on deep learning. IET Image Process..

Zou, S., Min, W., Liu, L., Wang, Q., Zhou, X., 2021. Movement tube detection network integrating 3D CNN and object detection framework to detect fall. Electronics 10 (8), 898.